VOL: 1 | ISSUE: 1

JUNE 2021 | ₹250

Telematics Wire

Technology Driven | Futuristic Vehicle

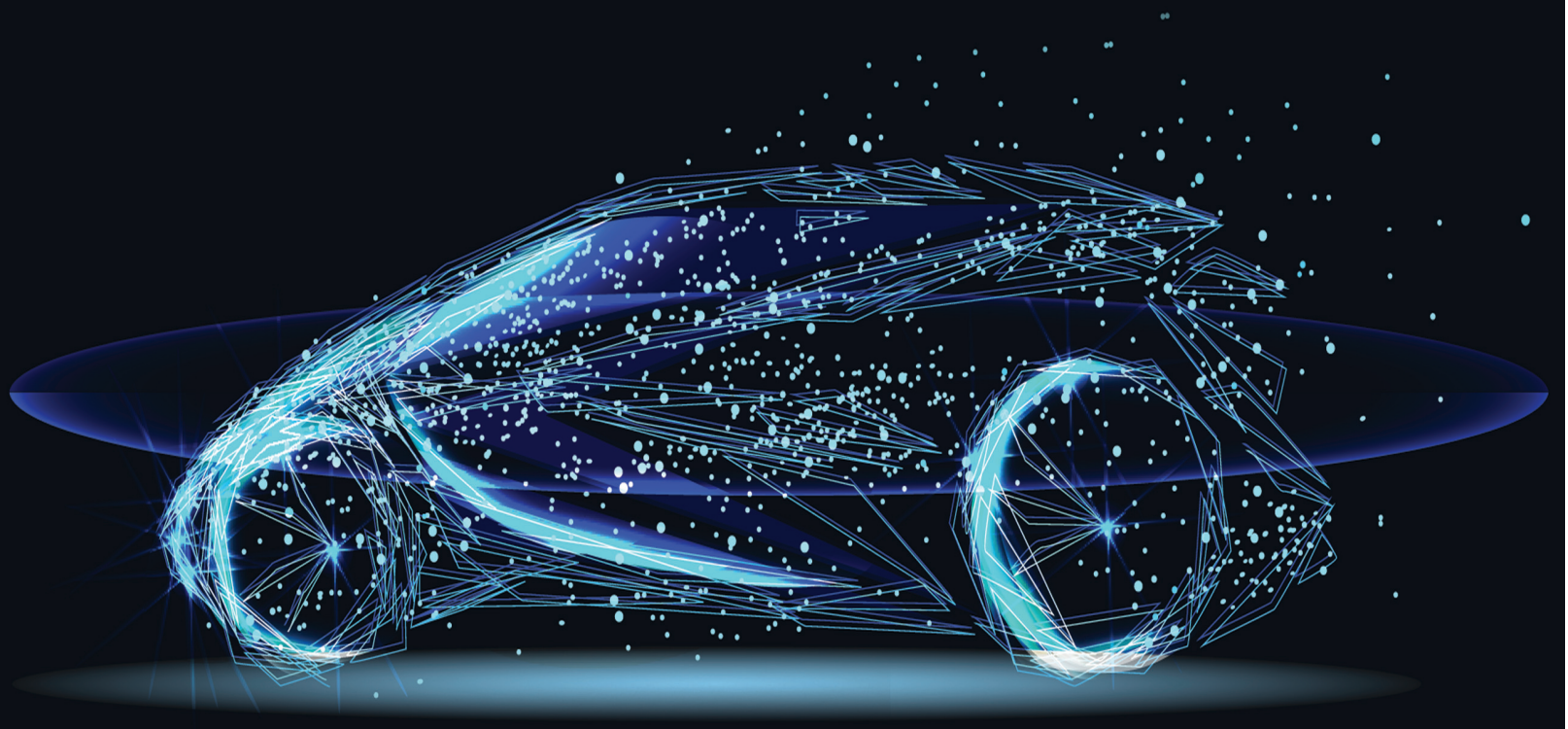

CAN LAB SIMULATION AND TESTING HELP US CATCH-UP TO RUN AUTONOMOUS VEHICLE ON OUR ROADS IN INDIA?

Are you building a Smart Parking Solution?

CAVLI wireless

What if you can save $50,200 in the first year and $70,600 over three years on connectivity management costs for your smart parking solution?

*for fleet size of 5000 units

Deploy your solution for **$0.99** /device/month

Here's Hubble 99 for you!

C1RM

NB-IoT | GPRS

Integrated eSIM

C42QM

LTE M | NB-IoT | 2G

Integrated eSIM

Contact us: sales@cavliwireless.com

Technology for the connected tomorrow

cavliwireless.com | cavlihubble.io

CONTENTS

VOLUME : 01 ISSUE : 1

CEO & Editor
Maneesh Prasad
maneesh.prasad@telematicswire.net

Deputy CEO
Anuj Sinha
M: +91 87440 88838
anuj.sinha@telematicswire.net

Director
Lt. Col. M C Verma (Retd.)

GM- Corporate Communication
Yashi Mittal
M: +91 98103 40678
mgr_corpcomm@telematicswire.net

DGM- Corporate Sales
Poonam Mahajan
M: +91 9810341272
mgr_corpsales@telematicswire.net

Editorial Team Member
Richa Tyagi

Web Developer
Neha Nagar

Designer
Bishwajeet Kumar Singh

Publication Address
Telematics Wire Pvt. Ltd.
D-98 2nd Floor, Noida Sec-63
Uttar Pradesh-201301
Email: info@telematicswire.net

Printed and Published by
Maneesh Prasad on behalf of
Telematics Wire Pvt. Ltd.

Telematics Wire Pvt. Ltd.
D-98, 2nd Floor, Noida Sec-63
Uttar Pradesh-201301
Email: info@telematicswire.net

Autonomous vehicle simulation

MANEESH PRASAD
CEO & EDITOR
maneesh.prasad@telematicswire.net
+91-9810346117

Waymo has been using simulation to drive millions of miles. This proved even more useful last year when due to Covid-19 the physical road test of its self-driving vehicles were suspended. As mentioned in their blog, one day of simulation covers nearly 20 million miles which otherwise would take over 100 years to cover on road. They have through simulation driven over 15 billion miles by last year, this was along with 20 million miles of autonomous drive on public road. More importantly these simulations did not require engineers to be in office working on powerful computers, but they were accessing the system through web interface from their home, during most of the work from home phase. In 2018, after the Uber Self-serving vehicle hit a pedestrian in Arizona, NVIDIA decided to move its self-driving vehicle off from public road to simulation labs, till the time technology is proven and safe. Mobileye and Intel company has been testing its autonomous vehicle in labs before they starting its on road test in Jerusalem and Munich and early this year, Mobileye decided to take its autonomous vehicle testing on road to four more cities. Perhaps Mobileye self-driving vehicle may have benefitted from 'Carla' (Car Learning to Act), a joint programme to develop a simulator for self-driving cars.

Simulation and testing has been assisting the development of autonomous vehicle, which represent highest order of technological complexity to control a vehicle. The good part of simulation is the heterogeneity of environment which can be covered, hence even for those regions or countries where the regulatory framework does not allow driverless vehicles to be tested on public road, using HD maps of roads from that region, simulation tools CAN test how a given vehicle will respond in a given region. In other words, though we hear about testing of autonomous vehicle on roads in North America, Europe, China, Korea and few other regions, but not much is heard from India, except for autonomous tractors from Mahindra or self-driving experimental vehicle running couple of kilometres from TCS and M &M. In such a situation can simulation help us with catching-up through lab testing to run such vehicle on our roads? Or irrespective of where a vehicle is being testing, an autonomous vehicle will be intelligent enough to adapt to local environment, traffic infrastructure, road furniture of a given region quickly?

Changing Paradigm of Simulation in Automotive Industry

SANDEEP SHETTY
Ansys

In 2017, Japan released its 'Society 5.0' blueprint, which envisions a 'super smart society' in which digital tools solve challenges such as the nation's aging workforce and global pollution. We are now in a new era, one in which innovation driven by enabling technologies such as IoT, AI, and robotics are bringing significant changes to the economy and society. Today, movements toward incorporating new elements into existing technologies and knowledge, thereby designing, and creating previously unknown business services, are gaining visibility.

Digitization, increasing automation, and new business models have revolutionized other industries, and automotive is no exception. These forces are giving rise to four disruptive technology-driven trends in the automotive sector: diverse mobility, autonomous driving, electrification, and connectivity or collectively known as CASE (Connected, Autonomous, Shared and Electric). The number of vehicles with CASE mobility characteristics will multiply over the next decade, completely changing the automotive landscape. The automotive companies are striving for speed to market and new technologies are bringing value through customized solutions catering to individual choice. To address this challenge, they must begin thinking beyond their traditional benefit offerings and overcome the deterrents standing within the way of speedy

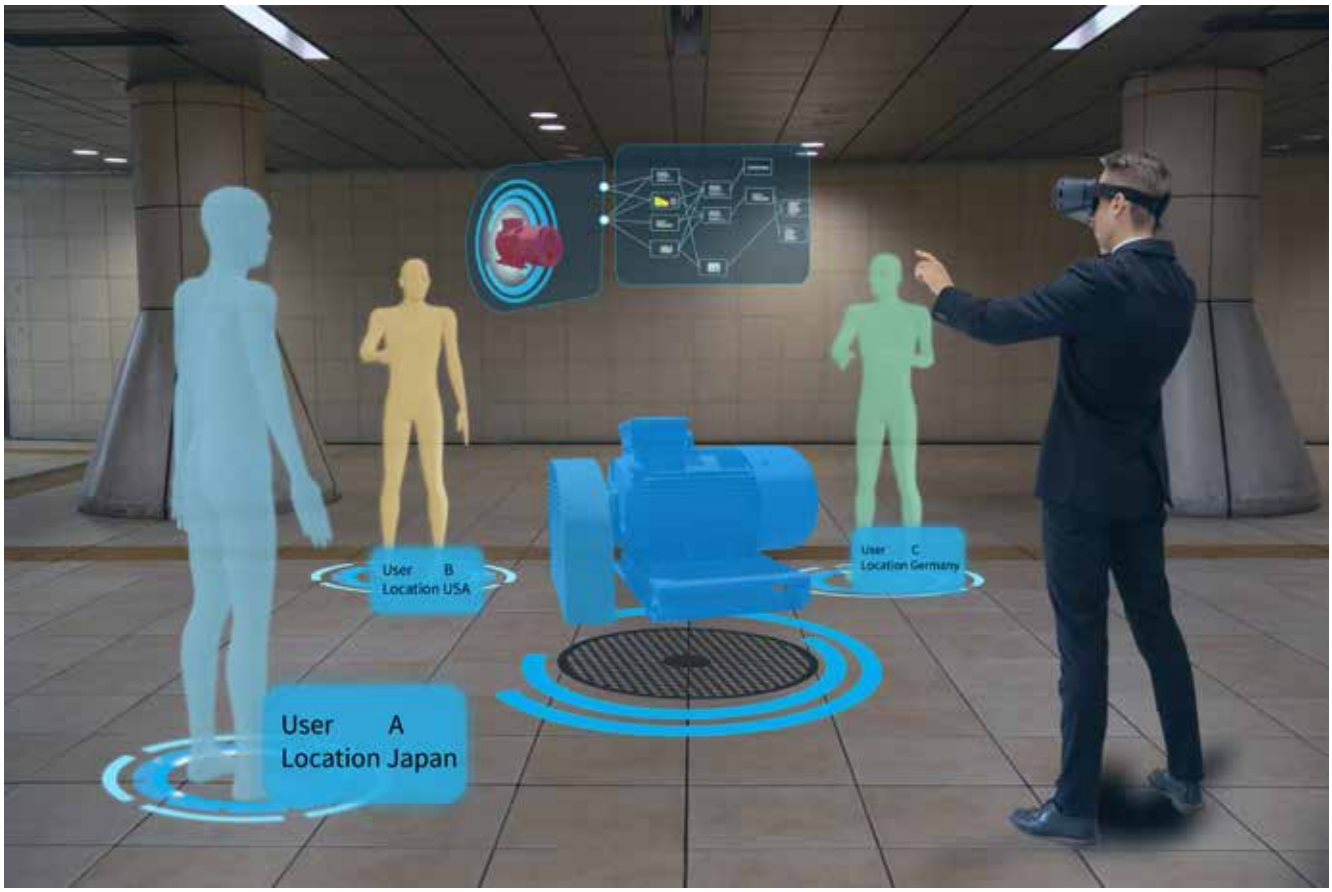

adoption of new technology by digital transformation to stay afloat in the market. The onset of COVID-19 has accelerated this process due to multiple factors with people working remotely, and this gives each of us a chance to re-imagine and think how we could do things differently. They are giving jitters to automotive executives who are worried about the rising complexity of vehicle engineering. The chances of an engineer failing to uncover and address potential catastrophes are directly proportionate to a vehicle's design complexity. One of the key tools to address this challenge is "Simulation".

Simulation allows automakers to virtually test and analyze an entire vehicle and its parts even before physical prototypes are made. It can help optimize a vehicle for safety, fuel economy and passenger comfort. The automotive industry was an initial adopter of simulation and has been leveraging this technology for the design and development of vehicles for several decades. In India, by skipping BSV and jumping directly to BSVI, the challenge of reduced time to adherence and technology development to fit the market made it imperative to develop simulation techniques to reduce the time and cost for physical testing. Moving simulation upfront in the product development cycle, finalizing combustion recipe by predicting performance and in-cylinder emission parameters, finalizing Coolant Hardware architecture, and achieving durability mileage and life - all these have been possible by applying simulation and developing simulation methodologies to address complex real-world scenarios and regulation requirement.

Though we have made significant progress in individual physics areas and models utilized for single discipline optimization, CASE vehicles pose multi-dimensional, multi-variant, multi-domain challenges. To address this, we need to break silos, create cross-functional integration and develop model-based engineering approach that uses models as an integral part of the engineering processes that includes the requirements, analysis, design, implementation, verification and validation of a system throughout its lifecycle.

Model based System Engineering (MBSE)

Model-Based Systems Engineering (MBSE) is the practice of developing a set of related system models that help define, design, and document a system under development. These models provide an efficient way to explore, update, and communicate system aspects to stakeholders, while significantly reducing or eliminating dependence on traditional documents. MBSE is the application of modeling systems as a cost-effective way to explore and document system characteristics. By testing and validating system characteristics early, models facilitate timely learning of properties and behaviors, enabling fast feedback on requirements and design decisions. MBSE helps the system engineer in assessing the relevance of the system architecture and the compliance with the desired system properties. The same results can be expected from its application to Simulation Systems.

Logistical complexity and software costs are higher. Higher fidelity designs earlier in the acquisition cycle saves program cost and schedule, design problems and conflicts are caught early and often reduces errors and delays at handoffs between disciplines, it helps capture and re-use of multidisciplinary engineering knowledge and reduces design cycle time by 2x to 3x. It allows models at different levels of fidelity to be integrated, ensures design consistency and captures design history, prevents over-design through high fidelity view of integrated product performance, improves decision making by enabling spatial comparisons between all relevant engineering data and creates ownership for overall product success among team members

Digital Twin

Today, detailed physics simulation is used to optimize structural, fluid flow, electromagnetic, thermal, and other physical properties. However, on ground, only a few are operating under the conditions envisioned when they were designed. Until recently, the people responsible for keeping these assets running at maximum efficiency had no way to understand the effects of operational and environmental changes

on asset performance. Is the machine headed for a breakdown that could cost tens of thousands of dollars per hour in lost production? Is it being run at sub-optimal conditions that will reduce its life over the long run? Are there opportunities to improve its performance by making changes to its operating conditions or upgrading its capabilities?

Technologies for engineering simulation and the Internet of Things have revolutionized asset management with a concept called the digital twin. Companies have been using sensors to collect data for many years especially for the high asset machine. However, this data is not always collected in real time, and the vast amount of data has made it difficult to extract actionable insights. The Internet of Things (IoT) makes it possible for the first time to use sensors to capture data from these assets to understand and optimize their performance instantaneously. By combining this operational data with other information on how the machine works — including maintenance records, PLM information and simulation results — together with analytics and machine learning to form an ecosystem, a fully featured model called

a digital twin can be built. Using a digital twin, it is possible to diagnose complicated problems that involve interactions of multiple subsystem and factors.

Simulation is critical to a digital twin as it supplies answers to questions like "What if we change this?" and "Why did that happen?" and "How do we improve the design?" Merging physics-based understanding with analytics delivers the insights that unlock the true value of the digital twin. Using these insights, engineers can understand the operational failure modes of the product, prevent unplanned downtime, improve product performance, and seed the next product generation. Digital twin promises to extend the value delivered by simulation beyond product development to the entire life cycle of a product enabling it to be studied under its actual operating conditions in its unique working environment. By creating a replica of the actual product system in a digital environment, engineers can anticipate and address potential performance and maintenance issues before they occur. The real-time, real-world insights collected via these digital twins can also accelerate future design iterations, leading to continual product improvements. Simulation-based digital twins complement analytics as you can generate baseline and failure data with simulation and predictive models provide higher accuracy and improved ROI by re-using existing simulation models. In addition, the operator can perform what-if analysis to simulate different solutions before applying to the assets. To maximize the value of simulation, the smartest engineering teams apply it at every stage of the development cycle.

> **"THE AUTOMOTIVE INDUSTRY WAS AN INITIAL ADOPTER OF SIMULATION AND HAS BEEN LEVERAGING THIS TECHNOLOGY FOR THE DESIGN AND DEVELOPMENT OF VEHICLES FOR SEVERAL DECADES"**

Conclusion

Engineering simulation has already demonstrated significant financial payback for companies. It has helped cut time and cost from the product development cycle, deliver quality products, and reduce service and maintenance expenses, resulting in higher customer satisfaction. The availability of compute resource power, coupled with technologies like IoT and AI/ML with focus on Model based system engineering are all leading to a new era of digital transformation. The impact of this transformation is not just a financial gain, but a reputational advantage with a system within the company where greener practices are no longer optional, and achieving carbon neutrality goals is an eventuality. ❑

AUTHOR

SANDEEP SHETTY
TECHNICAL MANAGER – APAC
ANSYS

Sandeep Shetty is the Technical Manager for APAC Enterprise accounts at ANSYS. In his current role, he focuses on Technical engagement with global Ansys Enterprise set of accounts. He has over 15 years of experience in automotive domain specially focusing on simulation driven product development. He works with customers to help them accelerate product development, process integration and continuous improvement.

SOKOL·M

WHEN THE WEATHER WORKS FOR YOU!

Agro insurance, agriculture, transport services, forestry farms, the energy industry, solar plants and many others depend on climatic conditions big time.

Know before you act!

Monitor weather phenomena and obtain a precise weather forecast for three days with a 95% probability.

- Fully autonomous
- Multi-channel data transfer via GSM, satellite communications, LoRaWAN, nB-IoT
- Plug and Play compatibility with other devices (up to 200 at a time)

+7 495 108 68 33

+7 905 038 39 47 (WhatsApp, Telegram)

INFO@FMETER.RU

WWW.FMETER.RU/EN/

Trends in Automotive Software Verification and Validation

ANUPAM GUPTA
Robert Bosch Engineering and Business Solutions

Market trend towards SW-defined car has changed rules and boundary conditions for mobility business. SPACE – Software and Services, Personalization, Autonomous Driving, Connected and Electrified Cars is transforming the traditional business models. The E&E architecture of modern cars is changing to keep pace with the market expectations. From domain centric vehicle architecture the trend is towards vehicle centric E&E architecture and vehicle cloud computing (Fig. 1). The global vehicle production is not expected to increase significantly year-on-year, even by the pre-COVID estimates. Therefore, SaaP and data-based services (XaaS) will capture significant portion of the business turnover. In Software engineering space trends like decoupling of SW and HW, OTA, and DevOps are becoming more common.

The Automotive Software Verification and Validation (V&V) is also significantly evolving to meet the changing customer expectation, agile development, demand for faster time to market, and pressure to reduce R&D costs. There is a huge focus on front –loading and continuous deployment of software.

In this article we will examine major trends influencing automotive SW V&V today and evolution of solutions.

The major trends in automotive SW V&V currently are depicted in figure 1.

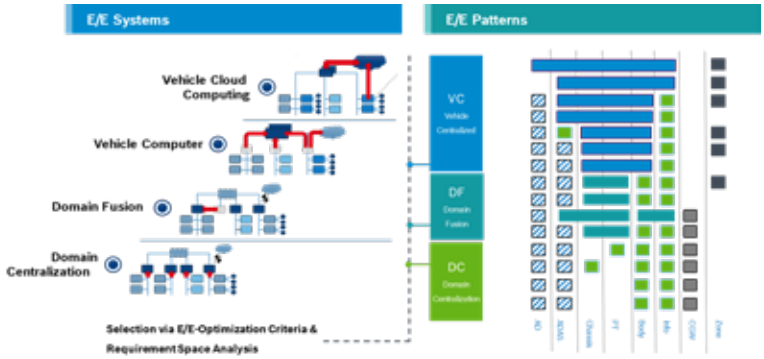

Figure 1 : Evolution of Vehicle E&E Architecture

Standardization:

There is ever increasing demand for standardization of V&V process, methods and tools. On one hand customers are demanding compliance to Test Maturity Model Integration (TMMI), ASPICE and the like. On the other hand, test strategies have to be defined keeping in mind functional safety (ISO 26262), SOTIF and country specific ENCAP and RDE regulations. We also see development of new standards by organizations like VDA, SAE and ISO. A typical example is the ongoing standardization of Software-In-Loop process and methods by VDA which is supported by many Auto-OEMs and Tier1s. The initiative is led by Bosch. In general standardization helps the

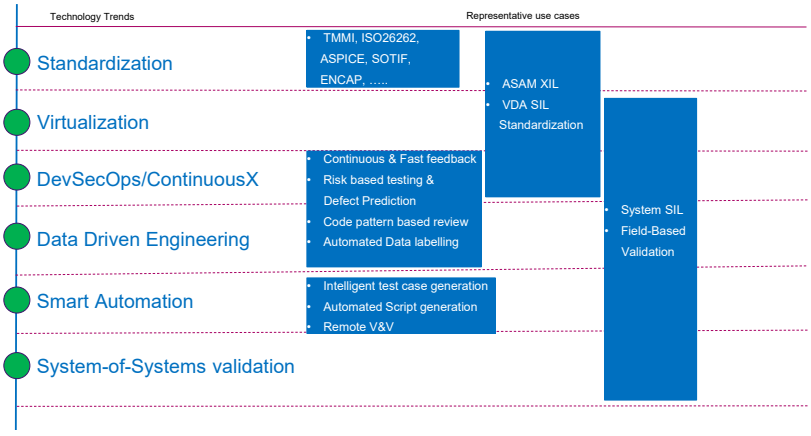

Figure 2 : Trends in Automotive SW V&V

business immensely and is supported by major industry players.

Virtualization:

There are certain situations which are very challenging or expensive to validate in field or in Hardware-In-Loop (HiL) systems. Eg. : Miles accumulation for autonomous driving, real driving emission (RDE) or near crash scenarios. Virtualized validation using Software-In-Loop (SiL) is an answer to this challenge. It can help in faster-than real time simulation, cost-saving by enabling front-loading of projects, helps test development in virtualized environment and later validation in HiL. It saves on validation in expensive lab set ups and proto vehicles in later phases of the product development. There are different use cases. While SiL is not a complete replacement of HiL or vehicle validation, it reduces the dependency significantly.

But there are challenges. First and foremost: Mindset. How to convince embedded systems engineers to test is virtualized environment and convince project managers to add the extra-activity of virtual ECU (vECU) generation in the product plan ? Secondly, how to establish methods for qualification of the SiL tool chain and the SW product? Thirdly how to establish the SiL validation set up ? It requires creation and integration vECUs with middleware along with plant, environment and sensor models from different suppliers. And then run the tests seamlessly with a test automation framework. Later the whole set up becomes part of a DevOps pipeline. Additionally there is need for IP protection.

Significant work is happening across the automotive industry to solve this puzzle. VDA initiative to standardize SiL is one such example. Many OEMs have already established component SiL test setups and using them for V&V. There are also agreed methods to deliver certain SW requirements with only SiL testing. Test coverage can be achieved by testing in SiL and HiL environments together. Reference architectures are being built to operate and deliver SIL both on premise and on cloud. Current efforts are on to build a System-SIL to test multiple vECUs in a system-of-system testing environment.

Automotive DevSecOps

While vehicle architecture is evolving towards increasing centralization, the need for SW V&V does not stop at start-of-production (SOP). Introduction of new features, new traffic regulations, system updates, security updates, troubleshooting etc. requires V&V for the new SW releases even after production. The traditional customer value creation cycle with slow feedback mainly through manual interaction is being replaced with a data enriched and faster automatic feedback cycle. There is rapid continuous improvement through data driven, agile feedback cycles. With the systems being connected, the cyber-security threats are ever-increasing and strategies need to be in place for a continuous monitoring and protection.

So the traditional waterfall model is b replaced with a continuous-integration-continuous-testing-continuous-delivery-continuous-deployment model, in short ContinuousX. Implementation of a Continuous testing strategy is essential for the success of this model.

DevOps is a composition of enhanced "engineering" practices that reduce lead time and increase the frequency of delivery. The primary goal of DevOps is to ensure Operations team members are engaged and collaborating with Development from the very beginning of a project / product development. DevOps is a cultural shift that merges operations with development and demands a linked toolchain of technologies to facilitate collaborative change. It requires pushing past departmental lines for more effective planning, design, and release of projects / products. DevSecOps is a strategy that extends DevOps efficiencies to software security. (src. : Building a DevSecOps Culture - from a Technical Perspective - Tech at GSA)

This approach really blurs the traditional boundaries of development and testing in SW development. The focus is on feature ownership in a team and frequent deliveries. All the major automotive OEMs have initiated this journey and Tier1s are following suite.

Data Driven Engineering

We have seen the transformation of the traditional value creation cycle into a data driven fast feedback cycle. This opens up the enormous opportunities to establish a data driven lifecycle in mobility. Here we are referring to mostly two types of data:

- Data available from current and past SW developments. It can be requirements documents, source code, test cases, test reports, other reports, executables etc.
- Data generated from field during a product's life cycle and is incorporated into the product development for new feature creation and verification.

We see a huge push to use the first type of data to deliver quality software. This data can be used to perform risk based testing and defect prediction, static code analysis with code patterns, automated data labeling and identification of edge scenarios from years of field acquired data. Also generation of synthetic scenarios, combining real and synthetic scenarios are being used more and more to catch defects at an early stage of development.

The field-recorded data on the other hand is used for both pre- and post-SOP activities. In pre-SOP phase data is used for design optimization, remote validation and field validation during ramp up. Post-SOP data is used for field quality management and product performance enhancement.

Artificial Intelligence and machine learning techniques are used to make use of data for creating insights during development and operations.

However there are challenges in bringing these methods to mainstream. The existing deterministic methods are not easy to replace. But industry is already experiencing early successes of data driven techniques in very traditional activities like static code analysis and power train calibration.

Here our suggestion will be to go for use-case driven approach and establish early success stories.

Please note, in this article we have rather focused on use of data and intelligent techniques for process and methods of V&V. The validation of cognitive systems is a huge subject in itself and needs to be addressed separately.

Intelligent Automation

Virtualization, DevSecOps and data driven engineering requires high level of automation to derive their true potential.

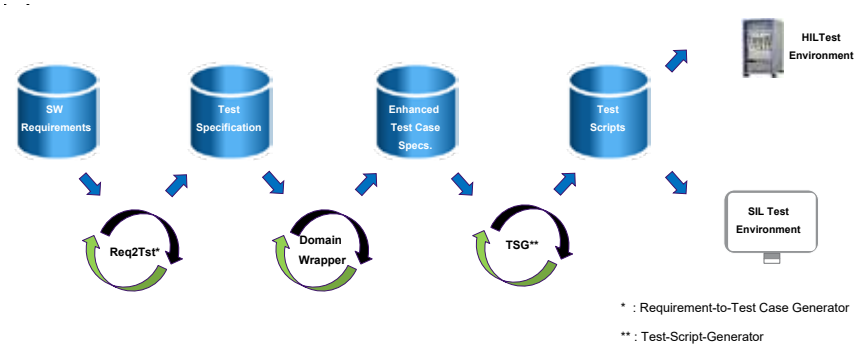

Figure 3 : Automated Requirement-to-Test Case Generation pipeline

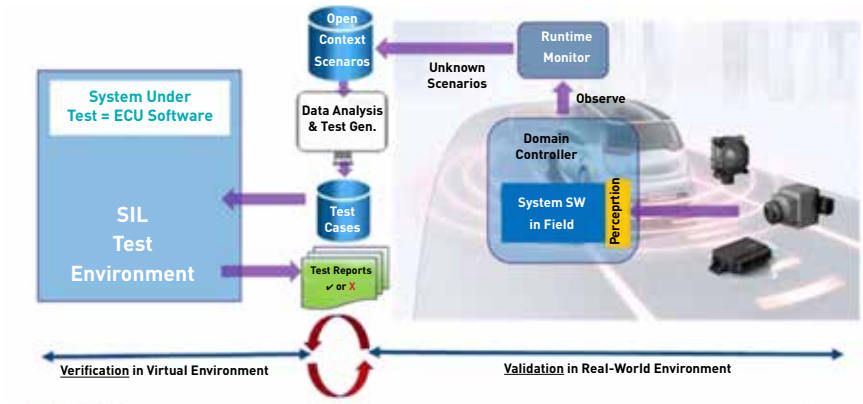

Figure 4 : Field Based Validation

Test automation has been well established in automotive SW validation for many years. The current trend is to automate not just the test execution but the entire test lifecycle. One of the major trends that we notice is to combine an intelligent core with a domain wrapper to derive full potential of the solution.

Let us elaborate a very specific use case for validating an automotive product. Here we have the challenge of high manual effort to perform unit test and schedule pressure to perform test coverage. The core of the solution is an AI engine using natural language processing and image recognition algorithms. This engine is able process the requirements documents consisting of text and images and generate high level test specifications. Then a domain wrapper, a post-processing script, is run to apply domain specific test methods on the high level test specifications. Lastly, as test script generator is used to create the final scripts which are run on the target system.

The initial training effort of the model was the biggest challenge in this solution. But once done, the productivity improvement is really high and long lasting.

System-of-Systems Validation

The INCOSE Systems Engineering Body of Knowledge (SEBoK) states that:

"The term "system of systems" (SoS) is commonly used, but there is no widespread agreement on its exact meaning, or on how it can be distinguished from a conventional system."

This is an accurate description of the state of understanding of the term. Despite this there are useful descriptions of SoS such the ISO/IEC/IEEE 15288 Annex G definition:

"A system of systems (SoS) brings together a set of systems for a task that none of the systems can accomplish on its own. Each constituent system keeps its own management, goals, and resources while coordinating within the SoS and adapting to meet SoS goals".

The US Department of Defense defines a SoS as:

"An SoS is defined as a set or arrangement of systems that results when independent and useful systems are integrated into a larger system that delivers unique capabilities"

All the above definitions talks systems from operations context. The human driven non-networked vehicles in that sense are not system-of-systems, even though they are very complex. The vehicle is driver operated and not typically supported directly during operation by either the component developing organizations, the OEM or a mobility provider. In the context of autonomous vehicle operations, we will fulfill many of the characteristics of SoS discussed above. A networked vehicle providing or using information from V2X, backbone services and perhaps satellite systems in conjunction with networked, embedded systems fulfills the criteria for geographically distributed and independently operated systems.

The validation of such systems require a different approach. First we identify the Device-Under-Test (DUT). This can be a complete vehicle E&E network or a set of subsystems delivering a specific function (eg. Lane Keep Assist or Parking Assist functions).We follow a test scenario based validation for a system-of-systems. The scenario libraries are used as reference and parameterized for a specific test case. The scenario creation is enabled by data driven engineering techniques described previously.

Field Based Validation: An Integrated Validation Approach

While major industry trends for Automotive SW V&V are evolving, an integrated solution approach is also being developed to handle the challenges of SPACE – Field Based Validation.

Field based Validation is "Validation of products utilizing information and experience from the target environment where a product is usually being used and under conditions which a product is usually being used. This allows Whitebox tests as well as Blackbox tests and is in addition a tool for proving evidence of specific V&V criteria in the field." – Robert Bosch Center of Competence for SW V&V

TELTONIKA | Telematics

22 YEARS OF IoT EXPERTISE

2 YEARS WARRANTY

<0.1% FAILURE RATE

13 MILLION IOT DEVICES DEPLOYED!

- IRNSS SUPPORTED
- UNIVERSAL BLE SENSORS SUPPORT
- DRIVING BEHAVIOUR
- 800 MAH INBUILT LI-ION BATTERY
- WATERPROOF IP67 CASING
- LLS SENSORS
  Accurate fuel level and temperature monitoring

FMB209

AIS140 + IRNSS COMPLIANT TRACKER FOR INDIAN MARKET

DIGITAL INPUTS	2
ANALOG INPUTS	2
DIGITAL OUTPUTS	2
RS232	1
SIM	EMBEDDED SIM
INTERNAL MEMORY	128 MB

TELTONIKA FMC209 — UPCOMING 4G VERSION

TELTONIKA FMB208 — UPGRADED VERSION OF ARAI CERTIFIED

USE CASES

- HEAVY DUTY TRANSPORT
- CAR RENTAL
- PUBLIC SAFETY SERVICES
- EDUCATIONAL INSTITUTIONS
- TAXI TRANSPORT
- PUBLIC TRANSPORTATION

CONTACT TELTONIKA INDIA AND LEARN MORE!

HQ - MYSURU
+91 821 4252200
INFO@TELTONIKA.CO.IN

BENGALURU
+91 80 4212 6700

GURGAON
+91 124 414 3200

Multiple use cases have been developed and is being practiced:

- Continuous System Improvement, including recording + re-insertion of additional situations for simulation
- Proving quality criteria / metrics for system release
- Runtime Safety Monitors

This method captures the essence of Automotive DevSecOps using virtualization and data driven engineering, where the data captured from real vehicles in field is fedback into the development system. This data in turn is used to create test scenarios which are used to verify SW in a virtualized environment.

Conclusion

As businesses are getting disrupted in many ways, it is necessary for V&V practitioners to evolve test strategies and incorporate new techniques to handle business challenges. A V&V engineer should continuously upskill oneself to become a full-stack engineer. In this way organizations will be able to deliver quality products and solutions under challenging circumstances. After all "Fight for good software is not a sprint, but a marathon!" - Dr. Stefan Hartung, Head of Bosch Mobility Business Sector.❑

AUTHOR

ANUPAM GUPTA
HEAD OF ENGINEERING AND LEAD, CENTER OF EXCELLENCE, VERIFICATION AND VALIDATION
ROBERT BOSCH ENGINEERING AND BUSINESS SOLUTIONS

Anupam Gupta is Head of Engineering and Lead, Center of Excellence, Verification and Validation at Robert Bosch Engineering and Business Solutions, Bangalore. It's a 100% subsidiary of Robert Bosch GmbH, Germany. Anupam is a real time systems engineer with experience in Automotive, manufacturing and defense electronics. In Bosch, India he is responsible for establishing and rolling out smart and futuristic V&V practices like SIL & Virtualization and AI for V&V. Prior to Bosch he was a Radar Scientist with DRDO, Bangalore. He is an avid reader, start up mentor and quantum computing enthusiast.

Automotive Software Integration & Testing

MOULIKANNAN SELVARAJ
Jaguar Land Rover China

In the world of constantly changing ecosystems and variables, the Quality element is always a moving target. A user expects his product to be exceptionally robust and functional in any dire environment. The Million dollar question is how to achieve a fail-safe system which continuously interfaces with unpredictable environmental factors.

Automotive systems software testing is special because of its exposure and adaptability to the diverse components internally and externally. A software generally in its development lifecycle, religiously undergoes testing. Software testing magnifies in proportion with the maturity level of the software in its development lifecycle, a good testing starts right at the requirements documentation stage. And there is Agile, which breaks the traditional way of development, it opens the window for changes at any state thus giving more ways to improve and manage system changes and also introducing challenges to software integration. In this modern automotive software development era, a single component is developed by multiple different suppliers intended for various vehicle lines that means each supplier of the module has to integrate with common On-board and Off-board components and features, adhering to the specific system architecture and different regional ecosystems. This is where a software test engineer starts to have their first nightmare. A single bug might appear on same system software of the component developed by one supplier but not on the other, tests have to branch out here like trees of Pandora.

Connected Car capability and interactive infotainment systems are a standard in any modern automotive that are built now. A connected vehicle is always connected even when the vehicle is turned off, the vehicle is ready and listens your command from your mobile App, your smart watch or from your laptop and instantly responded based on its activity state. Your request to the vehicle may be a simple vehicle charging status check, or a complicated route guidance which the navigation guidance extends in your phone app after your drive destination is ended. A connected vehicle has internet capability either by WiFi or the embedded sims (e-sim) in its T-Box module or the Infotainment ECUs, which makes the vehicle behave smarter than your mobile phones, constantly retrieving multiple services say it an online navigation, online media, weather information, real time traffic, interactive live streaming contents and services, Over the Air updates or any safety and convenient telematics functions. On the other hand, Driver Assist System modules with object recognitions and field sensing capability, it continuously interacts with the changing environment factors such as, a traffic sign, road signs, pedestrians and all vehicles around it. How do you ensure all these

hardware and software components which are made for different functions and adaptive to different architecture function in harmony? Is it possible to automate the whole end to end testing? How much does simulations help? Let's talk it out.

Simulations are higher at the unit level before it is merged with other sub-systems, starts right away with branch testing for logical verification and code execution coverage. Then at the level of integrations, the functional validation starts also enabling SIL (Software in Loop) testing and other automation test scripts to be run independently for each functional component in the system. A Scrum master's role is critical here, who manages and triggers the required tasks for the project, they enable the required integration, sprint changes and control software releases versions for those merge candidates in correlation with project release target. Integration owner works with the Scrum master controlling the validations for each delta changes and deployments. Primary key factor for any simulation are the test data, for example, a typical autonomous drive module or driver assist module testing includes collection of huge real-time data from thousands of test drive miles. Those data includes information about the different road types, complex multilevel elevated bridges, traffic conditions, external interactions including pedestrians, bikes, incidental traffic or road conditions. A simulation test engineer computes this data and replays it on the system in many cycles, also adds his own modifications and complex factors to the real-time data for different test cycles based on the needs. Same applies for an interactive infotainment system test scenario as well, a navigation log recorded for one vehicle test drive can be adaptively played for multiple different infotainment variants on multiple test vehicles or simulation set-ups to analyze the identified variations.

Security, it is mandatory to protect our data, authentications and interfaces. Dots are connected between security and testing as well, intelligent mobility systems are constantly connected to multiple cloud service providers, content providers and enablers, access providers and more. Each end points going over the mobile network adapts to the network protocol and server configurations. Every access points of the system is ensured to be verified according to the encryption and communication protocol. Any system end points that tends to have changes or updates to the external access point has to undergo a proper change management life cycle. Integration owner of the systems coordinates with other IT, Architects and component developers to ensure functionality and quality are kept intact.

A simple way to look at any system breakdown is based on the bed of platform each integration is done. An intelligent telematics module has smart hypervisor to cohere multiple systems each operating with diverse operating systems. Any subsystem simply interacts internally with onboard components over the CAN/ Ethernet and off-board components over the mobile network. The application interfaces provide gateway to interact with both internal and external subsystems for simulations and diagnostics. Any system's quality can be indisputable until is exposed with complicated network configurations and other external components. The A smart system stands out from normal systems by being intelligent enough to predict all possible external component behaviors and handle the vulnerable conditions with no compromise to the functionality and performance.

Software testing magnifies in proportion with the maturity level of the software in its development lifecycle, a good testing starts right at the requirements documentation stage

Quality is the end-game of any product, it totally depends on the moves made right from the start. Software testing starts at requirements stage beginning with review of the same but the quality of a product totally starts even before that on every step of verifications and validations of the system V lifecycle. Any software or system is expendable along the time and has to be constantly updated as the factors around it changes. Similarly when a system software is updated, best practice is to upgrade the validation as well. Running same thousands of test cases for the software versions A-Z is not the best practice followed. Hundred percent functional does not mean hundred percent quality, it can be reflected with one of my favorite quote from a quality guru "Quality does not happen by accident". ❑

AUTHOR

MOULIKANNAN SELVARAJ
TELEMATICS SYSTEM ENGINEERING MANAGER
JAGUAR LAND ROVER CHINA, PRODUCT ENGINEERING

Leads an expert team for integration and validations in Jaguar Land Rover China. Residing in China for more than 7 years, he closely encounters and plays his part in the rapid evolutions of intelligent mobility features in the largest automotive market. Mouli also led a team of Connectivity and Infotainment validations for Fiat Chrysler Automobiles and Mercedes-Benz in China.

Regulatory Push for ADAS Adoption - Important Step for the Indian Auto Industry

ROHIT KAPOOR
Cutting Chai Technologies

India has about half a million accidents (registered) every year accounting for over 150,000 deaths which is approximately 17 deaths per hour. Interestingly, the EU with sub 25,000 fatalities in 2019, is targeting zero fatalities due to road accidents by 2050 under their Vision Zero program. To be fair, India has a big population and a large number of vehicles on road, but adoption of safety related regulations and technology is very important to improve our road safety standards.

India transports ~60% of goods via roads vs ~40% in the U.S. and ~30% in China. One of the reasons for this high percentage of road transport is the underutilization of the railways and poor development of inland waterways in India. But an outcome of this is that ~8 million trucks are plying on Indian roads. We depend heavily on truck transport but interestingly there are no established standards with regards to how many hours a driver is allowed to drive at a stretch, or how many rest hours are mandatory. With express delivery services popularized by online shopping portals, there is increasing stress on the fleet operators to commit to tighter delivery schedules. But with no rules to ensure that the drivers are taking proper rest, a highly risky situation is being created on the Indian highways. There is an urgent need to adopt road safety regulations as it relates to movement of goods via trucks and implement them. The U.S. and Europe have adopted legislation to improve the safety on their roads and we need to learn from them.

The U.S. Commercial Motor Vehicle Safety Enhancement Act mandates the ELD (Electronic Logging Device) that needs to be there in the commercial vehicles to keep records of duty status (RODS). This has been implemented since December 2017 and rules have evolved to permit the use of a Smartphone application to input the data. Given the high penetration of Smartphones in India and ubiquitous wireless networks, India can adopt rules to ensure that truck drivers follow a time schedule for sleep, breaks etc. and the same can be managed through mobile applications. Infact, for very heavy trucks, say over 25 ton and those transporting hazardous materials including Oil n Gas, Chemicals etc. there should be a mandate to have Advanced Driver Assistance Systems (ADAS) – this is basically a dashboard mounted AI Cameras that monitors the driver and raises alerts if the driver is distracted by e.g. using his mobile phone or appears drowsy. These ADAS systems are being deployed as a safety tool in many countries and Europe is taking a lead in adopting legislation to mandate the use of advanced safety technologies. The European Commission adopted the revised General Safety Regulation (GSR) in late 2019 which mandates the adoption of advanced vehicle safety features. Among the list of safety features are "Driver Drowsiness and Attention Warning System" - the system will detect the driver's level of alertness and warn those who are drowsy or distracted. These systems must be fitted in all new models from July 2022.

Adopting technologies like Advanced Driver Assistance Systems (ADAS) may seem like a financial burden for fleet operators but it is highly likely that the cost of these systems could be recovered from lower insurance premiums and lower operational costs including better fuel efficiencies, lower maintenance as the truck drivers facing a dashcam are likely to be more careful while driving. Automotive electronics is an evolving field and local deployment of these systems would create a local market and help develop indigenous competencies in the field. The local development of Advanced Driver Assistance Systems (ADAS) would be the starting point of developing platforms that could help the driver navigate tricky situations on the roads via front/side/back facing AI cameras and that technology would aid the further development of autonomous driving technology. India needs to get on the autonomous technology bandwagon to ensure local companies can develop competencies to ultimately build autonomous vehicles - else India will be dependent on foreign companies for the technology. ❑

AUTHOR

ROHIT KAPOOR
CO-FOUNDER AND COO
CUTTING CHAI TECHNOLOGIES

Rohit Kapoor is Co-Founder and COO of Cutting Chai Technologies and is also advising startups. Over the last 20+ years, he has worked in leadership roles with diverse firms in the technology/telecom sector viz. Qualcomm, Siemens, Telefonica, Swisscom, HP in India, Europe, and the US. As Director of Business Development, he helmed Qualcomm's entry in the adjacent markets of Automotive, IoT and Networking in India. He has done his MBA from INSEAD, France and Electronics and Communication Engineering from MIT, Mangalore University, India.

INTELLI TRUCK
FLEET TRACKING & SAFETY SYSTEM

TRAK N TELL

TRACK YOUR FLEET WITH ADVANCED SAFETY & SECURITY

BUY ONLINE
₹1899

- REAL TIME GPS TRACKER
- GEO-FENCE NOTIFICATION
- OVER SPEEDING ALERTS
- FUEL MONITORING*
- 90 DAYS TRIP REPORTS
- NEAREST VEHICLE LOCATOR
- FREE FMS
- AIS 140*

*Extra Charges Apply.

www.TrakNTell.com/truck

TO KNOW MORE
CALL : 8010-80-8010

TRAK N TELL

Designed in India, manufactured in India #MakeInIndia
Trak N Tell™ is a registered trademark of Bits N Bytes Soft Private Limited

MAKE IN INDIA

CurrentRF Driving Range Extension and Testing for Electric Vehicles

MICHAEL HOPKINS
CurrentRF

Electric Vehicle Driving Range limitation is a primary roadblock to public acceptance of Electric Vehicles. Currently, the maximum driving range of production worthy Electric Vehicles is 400 miles (The Tesla Model Y). The Driving Range of conventional ICE (Internal Combustion Engines) with a 22 gallon tank ranges from 550 Miles to over 2000 Miles. Obviously, much needs to be done to improve EV Driving Range.

As EV battery capacity, alternative energy sources, and EV motor efficiency increases are on the horizon, however, putting these lab innovations into production and practice at an economical cost is not yet realized.

There is much noise energy in Electric Vehicles today, generated by the Vehicle Traction Inverter, so much so, that Tesla uses what are in essence Coaxial Cables in their vehicles for electrical interconnect. See the cross-sectional view in Figure 1.

This cabling is done to prevent the EV from being a "transmitter' of noise generated energy as the outer shield is grounded to the chassis of the EV. If this noise can be captured, re-purposed, and re-used, needed battery current can be reduced in the EV system, and EV Driving Range Mileage increased.

Figure 1 : Cross-Sectional View of a Tesla Supply Interconnect Cable

The NEW Technology

CurrentRF has developed IC technology that captures, re-purposes, and re-uses this afore mentioned noise current. Figure 2 shows the basic function of this technology. All Electric Vehicles have a "smoothing capacitor" or DC-Link Capacitor that filters and shunts Traction Inverter generated noise away from the Traction Inverter-Battery supply line to system ground. This is done to increase Traction Inverter efficiency. This filtering is not perfect and the noise the DC-link Capacitor shunts to ground draws battery current during the re-charge cycle of the Capacitor.

CurrentRF has developed an IC that attaches to the ground side of a DC-Link capacitor, absorbs this DC-Link Capacitor ground current, inverts a portion of this current, and outputs this current in opposite phase, cancelling a portion of the original current impulse. This action limits the "deep-discharge" of the DC-Link Capacitor, limits the supply line noise, decreases the current drawn from EV system batteries, this said current needed to re-charge the DC-Link Capacitor. This current reduction ultimately extends the Driving Range of a given Electric Vehicle.

The Installation, Versions, and Testing

Figure 3 shows the internal insertion of the CC-100 IC into the DC-Link Capacitor and Traction Inverter Electric Vehicle Drive Train. As shown, the CC-100 IC fits directly underneath, on the ground side of the system DC-Link Capacitor preventing the deep discharge of the DC-Link Capacitor, lessening the re-charge current drawn from system batteries, ultimately extending Electric Vehicle Driving Range.

The primary challenge to Electric Vehicle public acceptance is Vehicle Driving Range. Figure 4 shows the testing results obtained from an Electric Vehicle

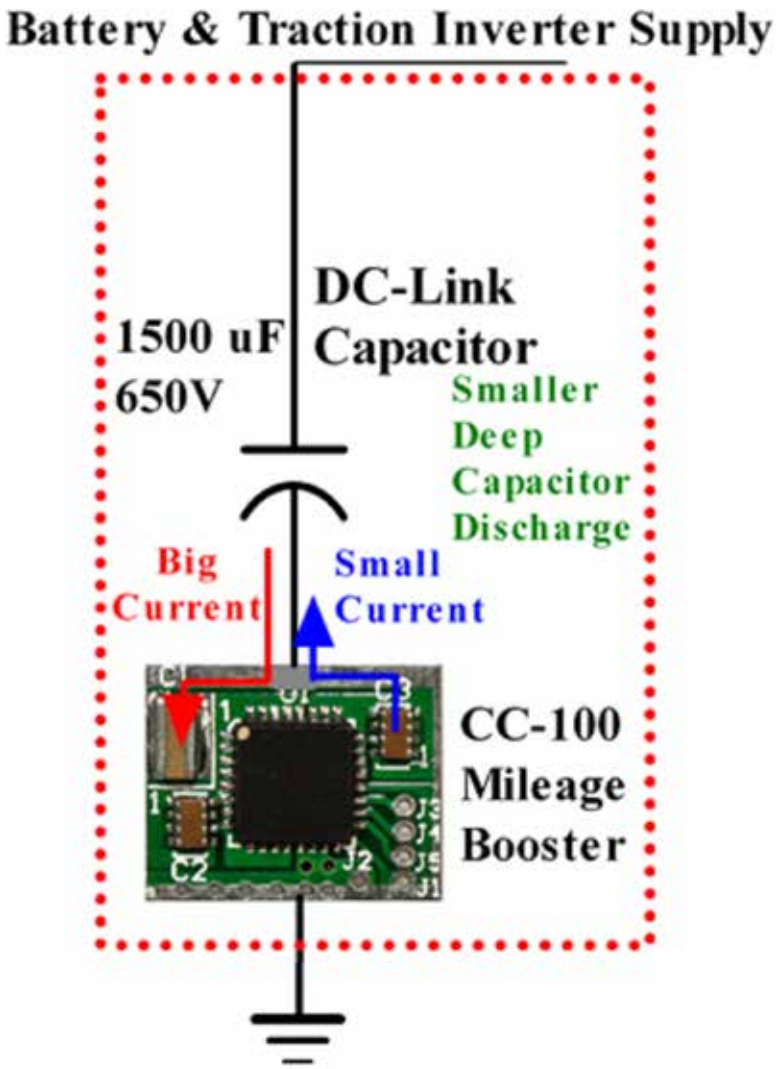

Figure 2 : Structure and Dynamics of the Enhanced DC-Link Capacitor

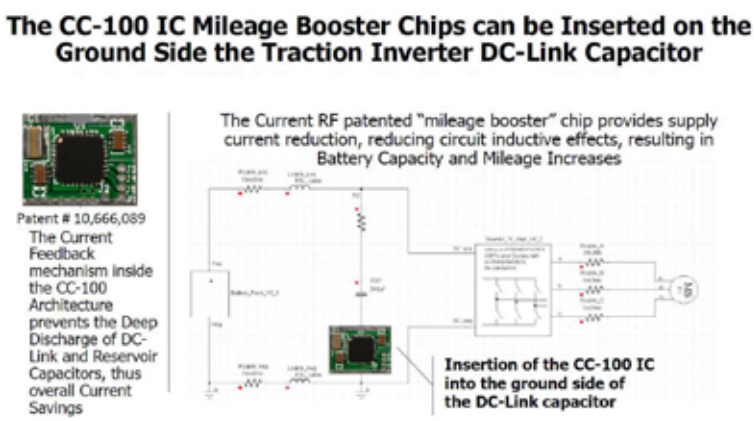

Figure 3 : Schematic Structure of the CC-100 1C "Mileage Booster" Insertion

Drive Train. With the testing results shown in Figure 4, the battery current saved and the resulting mileage extension of an Electric Vehicle Drive Train is obtained as the result of using the CC-100 technology attached to the ground side of a typical Electric Vehicle DC-link Capacitor running in an Electric Vehicle Drive Train. The physics and dynamics of the CC-100 technology allows the "Enhanced DC-Link Capacitor" to be placed at any point in the Traction Inverter and EV Battery supply line, and even at the DC charging ports of an Electric Vehicle as shown in Figure 5 (consumer version).

The cost of this solution is $39.00 per Electric Vehicle (minimal as compared to the Electric Vehicle cost), is available today and needs to be implemented in any of the commercial forms shown in Figures 3 and 5. The implementation of this technology will yield an additional 10% in Driving Range, or 50 miles of Driving Range, given a Tesla model Y nominal Driving Range of 400 miles on a single battery charge. As battery technology and motor technology advance, giving the Electric Vehicle increased Driving Range, the Driving Range increases as the result of the CC-100 technology will increase as well. In essence, the longer the battery stays up, the larger the CC-100 Enhanced DC-Link Capacitor induced Driving Range increases will become. The CC-100 technology is obsolete-proof.

EV Current Reduction, Noise Reduction, and Mileage Extension Testing

In that the Traction Inverter noise contained on battery supply lines in Electric Vehicles is difficult to measure and quantify, CurrentRF has developed testing procedures and an architecture that allows current measurements and reveals the delta in battery current with and without the CC-100 engaged, as shown in Figure 4. The schematics of this testing architecture are shown in Figure 6.

Testing Procedures

The procedure for this noise and current reduction measurement is simple. First, control the torque to which the Electric Vehicle Drive Train is mechanically exposed. This is done with the use of a controlled incline dynamometer shown in Figure 7. Secondly, with the torque control set-up, control the speed of the vehicle and the incline emulated torque that the dynamometer applies to the Electric Vehicle. Thirdly, with these controlled mechanical conditions set, test the Electric Vehicle with and without the CC-100 Enhanced DC-Link

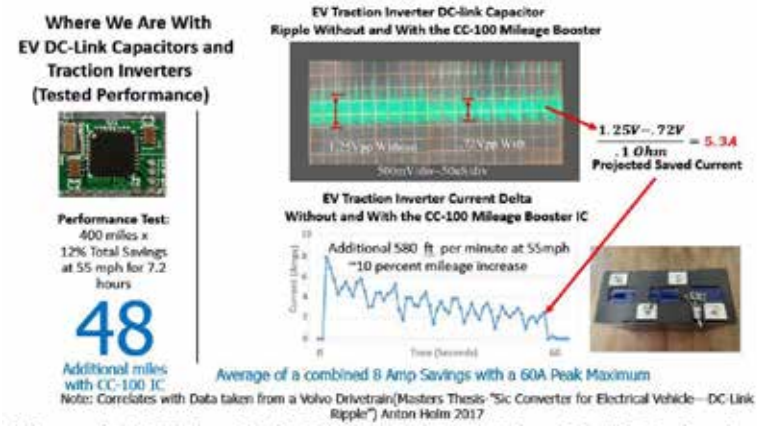

Figure 4 : EV Drive Train Testing Result of the CC-100 Technology

Figure 5 : CC-100 Enhanced DC-Link Capacitor Embedded in a Charging Port CCS Cap

Capacitor engaged. This testing should be done "back to back" (i.e. one test run with the CC-100 Enhanced DC-Link Cap disengaged, the follow on test run with the CC-100 Enhanced DC-Link Capacitor engaged). This "back to back" controlled testing should be done with equal mechanical, vehicle speed, and test time duration conditions. For each of these tests, the voltage drop across in series sense resistors (series resistors from the battery pack to Traction

Figure 7 : Volvo Drive Train with Dynamometer Adjustable Load

Inverter and DC-Link Capacitor) shown in Figure 6, is recorded with an Onset UX120-006M Analog Data Logger also shown in Figure 6. Fourth, after this data is recorded, it can be downloaded into a spreadsheet and using Ohms Law, the with and without battery currents can be computed and subtracted, creating the delta plot shown in Figure 4.

Conclusions

Clearly, EV System "noise loss" is a phenomenon that is not understood by most in the Electric Vehicle Industry. This non-understanding is exasperated by not being able to directly test for this noise or do anything about this "noise loss" in battery current draw. The CC-100 IC is the only device on the market today that can capture, re-purpose, and re-use the noise present in Electric Vehicle Drive Trains, the CC-100 IC creating the CC-100 Enhanced DC-Link Capacitor. This simple 2-wire connected device is economical and is easy to build and install in new and existing Electric Vehicles. CurrentRF can provide sample devices and assist in the testing of these devices in Electric Vehicle Systems. ❑

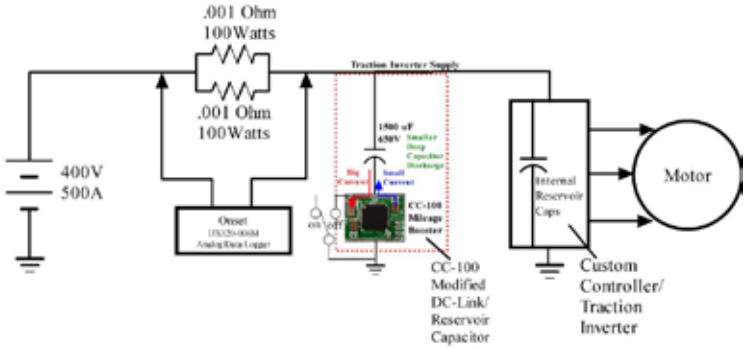

Figure 6 : CC-100 Electric Vehicles Testing System EV Current Reduction, Noise Reduction, and Mileage Extension Testing

AUTHOR

MICHAEL HOPKINS
FOUNDER AND CEO
CURRENTRF

Michael Hopkins is the Founder and CEO of CurrentRF, A California based research and development company, founded in 2002. Through activities with CurrentRF, Michael developed the RFDAC methodology and Current Reuse Mixer (the CRF2101) in 2002, and more recently, the CC-100 IC and Enhanced DC-Link Capacitor technologies (subsystems, chips, IP) the company is currently marketing.

www.securethings.ai

SECURE THINGS™

The Preferred Partner of Automotive Manufacturers in India for Cyber Security

Multilayered Automotive Cyber Security Solution

- ECU Protection
- Network and In-Vehicle Network Protection
- Connected Services Cloud Security and Security Incident Analytics

PRODUCTS AND SERVICES

- Advanced Network Protection for Connected Vehicles (IP, Cellular)
- AI based Comprehensive Vehicle Network Intrusion Detection & Prevention System (CAN, Ethernet)
- Advanced ECU Protection (Telematics, Infotainment, Gateway etc.)
- Highly Secure OTA update for efficient and cost effective deployment
- Security Assessment & Penetration Testing for entire Vehicle and Ecosystem
- ISO 26262 (Cyber Security Provisions) & ISO 21434 Compliance

Recognized as one of the 20 Most Promising AUTOMOTIVE TECH Solutions Provider 2019 by CIOReviewIndia

SecureThings.AI Pvt. Ltd.
401-403, Tower 2, Montreal Business Center, 272/4,
Pallod Farms Rd, Aundh, Pune, Maharashtra 411045, India
+91-7350988670 | Email: info@securethings.ai

USA Office Address:
640 W California Avenue, Suite 210 Sunnyvale CA 94086
+1-408-769-6036 | Email: info@securethings.ai

Automotive Testing and Simulation

RAJESH VAIDYA
Blackbox GPS Technology

In the past decade, the global automotive industry seems to have grown by leaps and bounds. The industry has witnessed a significant rise in production and sales in recent years chiefly owing to an increased demand in emerging markets. If one is to survey the scenario in terms of volume, the industry is expected to reach 1,13,366 units by 2024. In a culture of such tremendous growth, it is not surprising for automotive technology to grow in equal proportions. T echnology is most certainly the way forward for any industry but as they say, it is still magic even when you know how it is done. What, then, is automotive simulation and how exactly does it work? Let us explore.

In the past, Original Equipment Manufacturers or OEMs used to adopt a lengthy and rather cumbersome process of prototyping. This was done primarily to develop newer models of vehicles. However, the times have changed and processes must follow suit. Automotive Simulations allows the OEM to develop prototypes quicker and in a much more cost-efficient manner by taking recourse of a digital twin approach. Time saved is money gained and automotive simulation techniques help achieve the goal quicker. In today's day and age, automotive simulation and testing play a very important role in the process of developing cars, buses, two-wheelers, trucks, three-wheelers and other such vehicles.

As larger investments are being made in the development of advanced vehicle technology such as smart electronics and safety control sofiware, the popularity of automotive simulation is constantly on the rise. With this rise, we notice a parallel rise in attempts at improving fuel efficiency and a reduction in vehicle emissions. As the world edges towards growth and development, the automobile sector seeks to constantly reinvent itself through innovations and improvisations. A prominent path to achieving this goal is the re-engineering of components of a vehicular system. Areas of improvement include energy efficiency and the implementation of smarter control systems. These are done for the purpose of improving safety, efficiency as well as reliability. Several big companies around the globe today offer smart sofiware solutions that provide detailed methodologies designed to fulfill every requirement of modern day vehicular systems.

Automotive Simulation serves the bi-fold purposes of solving real-world real-time problems in a safe, effective and efficient manner as well as offering a critical analysis of easily verifiable observations. It is not only the automotive industry that benefits from the rise of simulation modelling. Several other businesses across various sectors are increasingly using simulation modeling to develop prototypes and test existing methodologies. Not only are simulation tests a more practical approach to solving real-world problems, they are a safe, effective and reliable method of getting quicker results that further enables engineers to conduct tests and seek developments based on previous simulation results. Every time one chances upon a complex system, simulation offers the easy answer via clear and rapid insights. Simulation Modelling has not only led to a more transparent and lucid development process but has also displayed the marvels of software and automotive engineering to the world.

The simulation may be conducted on vehicle applications of fluid, thermal, electromagnetic, electronic, semiconductor, software and fully integrated systems. This also paves the way for extensive virtual design exploration that enables us to ensure safety, quality and reliability from the first phase of design implementation. This particularly benefits manufacturers of sports and racing vehicles as one can implement early quality and reliability prediction methods and creative hybrid prototypes. Training in numerical and mathematical modelling therefore forms an integral part of automotive simulation and virtual testing. The software, in these cases, may be looked at as the brain of the vehicle and therefore the most important component. By replacing the human element in the system, it automatically reduces and in some cases perhaps even eliminates the risk of human error. Things are laid out scientifically, systematically and in a more precise manner.

Automotive simulation testing is a rapid and easy method of practically trying out possible combinatorics via virtual modelling. Such modelling takes the help of software and other technical systems. This brings us to the natural progression of questions:what are the elements or aspects that virtual testing can help us make design-based decisions about? Firstly, one can talk about Vehicle Decision Making. How does one define it? Vehicle Decision Making is nothing other than the process of constant decision-making by the driver in a complexity of flow of traffic. However, in the case of automatic vehicles, it is the software that must make the decisions and take the call on what is to be done next. The reaction comes directly from the brain of the car (which is the software set in place via algorithms) thereby eliminating the chances of human error. In a sense, one relies on predictable mathematics

rather than unpredictable human thought patterns. Another aspect highlighted by the automotive testing phase is powertrain development. As the terrain changes, especially in countries such as India and the United States, one requires certain adjustments in human driving patterns. For example, driving speed may differ from driving smoothly on a highway and then suddenly approaching the city as fear of hitting passersby and causing accidents will be higher. Such a scenario is not unheard of in countries like India where cows would suddenly be found roaming on an otherwise busy road. In such cases, it is not difficult for a software to simulate probabilities and possibilities that may revolve around increase and reduction in speeds or even the vehicle suddenly coming to a halt. In a car of such format, one would require a highly efficient engine. Such simulations are not only recommended but mandatory for complex combustion engines and even electrical hybrid varieties. As visual designers would be required to optimize the use of its two power sources, simulation testing in a highly controlled environment would enable this quite easily.

To put it quite briefly, automotive simulation lends an angle of optimisation to the entire process of product development. Via this model, one can virtually test out for themselves real-world ramifications of virtually developed products intended to solve research-driven hypothetical complexities. Alongwith simulation, there are two other factors playing an optimal role in the testing phase: multiphysics modelling and virtual testing. These are effective tools for validating digital prototypes. But what are the benefits to such validation? To put it quite simply, the streamlining of design techniques, the decisions of chassis dynamics as well as system efficiencies and developments are accelerated and solidified through automotive simulations. Instead of having to consider each and every subsystem such as clutch, transmission, chassis or engine separately, engineers are now able to look at systems as a whole. By looking at the integrated solutions, engineers are quickly able to identify loopholes, complexities and systemic issues that may have otherwise been overlooked.

There is yet another benefit to automotive testing that remains to be discussed which is quality control. Alternatively referred to as quality management, this refers to the increasing usage of electronic systems and softwares in the development and production of automotives that are ably guided and aided by the simulation processes.

> **"VEHICLE DECISION MAKING. HOW DOES ONE DEFINE IT? VEHICLE DECISION MAKING IS NOTHING OTHER THAN THE PROCESS OF CONSTANT DECISION-MAKING BY THE DRIVER IN A COMPLEXITY OF FLOW OF TRAFFIC"**

Avoidance of hazards and risks that would otherwise need to be tested out at a cost of damage to resources, time, money, energy and even human life can be underlined as a major factor in the quality control, management and improvement process.

This process is quite reminiscent of Gestaltism: a theory that believes that the whole is greater than the sum of its parts. Via automotive simulation and the subsequent virtual testing, engineers are now able to look at automotives from a fresher, more holistic perspective without the extra monetary cost, the physical hassle, waste of resources and most importantly, in less than half the time taken via previously outdated approaches. In a sense, automotive simulation and testing is the need of the hour and the road ahead.

The world is increasingly relying on this well-designed and carefully-crafted system to ease operations and the product development process in general.

With the use of simulation testing, automotive engineers can now gaze upon a future bereft of unnecessary hassles. In a sense, they now seek to welcome future innovations once considered impossible at the drop of a hat at a fraction of the cost. We talk of a world that (thanks to Tesla) is now considering self-driving cars. This is truly one of those futuristic wonders that the world may not have been able to perceive a couple of decades earlier. However, human beings today do live in the world of the future: a world that is increasingly dependent on superior technology to further the advancement of the human race. As we progress towards building the future of our dreams, the need for rapid, safe and effective technology is also on the rise. Simulation is a wonderful way to integrate and control the electronics and mechatronics interactions and to take a wider look at the picture by looking at the system as a virtual engineering marvel with sufficient scope for optimisation and advancement.

For improved methodology and advanced technology solutions, you can take consultation from Blackbox GPS Technology. We work on future opportunities and explore the real world.❑

AUTHOR

RAJESH VAIDYA
DIRECTOR OF BLACKBOX GPS TECHNOLOGY
BLACKBOX GPS TECHNOLOGY PVT. LTD.

Rajesh Vaidya is a director of Blackbox GPS Technology Pvt Ltd. . Being a director of manufacturing GPS Tracking Device Company he has interest and skills developed in arts and writing. He is one of the passionate leaders with qualities like integrity, accountability, vision, influence, and positivity. BlackBox GPS Technology is a pioneer in India who had started Telematics Solutions in India.

Optimization potential for HV vehicle networks by system simulation

Rosenberger, maker of connector and cable assemblies, recently applied the ZVEI guideline TLF0101 to study the optimization potentials.

The ZVEI guideline TLF0101 describes a standardized format for exchanging parameters of electro-thermal component models for the system simulation of the vehicle electrical network. This thermal optimization process can greatly reduce connector size and weight, wire cross-section, and development times depending on the installation situation.

The HV vehicle network can already be virtually dimensioned with this system simulation at the time of specification. The successive reduction of the cable cross-sections shows a considerable optimization potential – with the use of the Rosenberger HVS®240 connector with 50 mm² cross- section, for example, volume and weight savings of 30% as well as a reduction of the cable cross-sections of almost 50% could be achieved compared to the original design.

To verify the simulation models, Rosenberger and Leoni developed a demonstrator – consisting of cable, connector and power unit. In the process, the calculated saving potentials could be confirmed in practice.

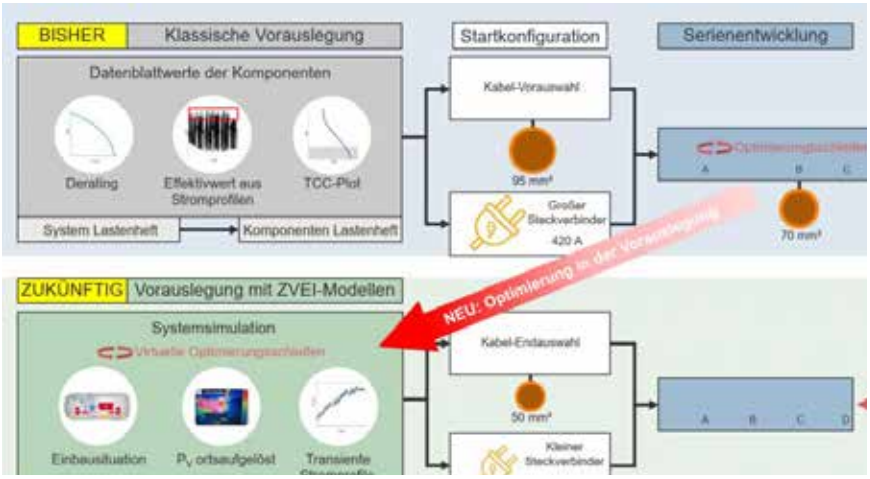

Optimization of the product development process through preliminary design with ZVEI models (Image: Rosenberger Hochfrequenztechnik)

In this way, HV on-board networks can be thermally optimized in accordance with the ZVEI guidelines

A ZVEI guideline describes a standardized, manufacturer-independent format for the exchange of parameters of electro-thermal models for the simulation of the on-board network. This methodology contributes to the fact that the size and weight of the connector, the cable cross-section and the development times can be greatly reduced.

While the electric drives of the first generation were still being incorporated into existing vehicle platforms in small numbers, electric vehicles of the current generation are built around the electric drive as a central element. About electro-mobility on a broad basis in the market to establish, the purchase price and range are the decisive factors. Higher range requirements increase the space and weight of the HV battery in particular.

The resulting increase in acquisition costs for end customers currently still require subsidies in order to be able to offer entry prices comparable to combustion engines. The top priority of the entire automotive industry must therefore be to end dependency on subsidies as quickly as possible. On the one hand, the adjustment screws are to reduce the battery costs (here out-of-scope) and, on the other hand, to use the far lower complexity of the electric drive train compared to that of a comparable combustion engine in order to lower development and material costs. The methodology described here from the ZVEI guideline contributes to this by showing the potential savings in development time, material cross-sections, weight and installation space through the design of the HV on-board network using standardized system simulation. ❑

Sensor Fusions: The key to unlock the future of Autonomous Cars

TUSHAR BHAGAT
DIRECTOR, UFFIZIO INDIA

Eventually, the goal of an ideal autonomous (better known as self-driven) car is to replace human drivers. To become a perfectly safe and perhaps a more efficient "high-tech" substitution! In essence, this means that level 5 or "fully autonomous" cars will be able to sense their surrounding, make sense of it, and then navigate safely with little or no human intervention.

When humans drive, they deploy and heavily rely on their sensory organs. Think of your eyes as visual sensors that continue to collect data from the environment. Say it perceives another car, or a pedestrian, or an approaching speed bump, and transmits that data to the brain. Your brain interprets those electromagnetic waves, perceives relative distance and speed, and then relays an appropriate response to your arms and legs. Say if you are too close to a pedestrian, your bodily sensors detect it, your brain creates an appropriate response—so you can hit the brake pedal and avoid an impending collision.

Sensors and Sensor Fusion

For an autonomous vehicle to achieve this, it needs sensors and sensor fusions.

The key difference between a non-autonomous and an autonomous car is the absence or presence of sensors and in-vehicle technologies. Autonomous vehicles, like human drivers, depend on sensors to perceive their environment. Sensors like cameras, Lidar, Radar, Sonar, GPS, IMUs can be used to make proficient autonomous cars. They collect data and pass it on to the sensor fusion, typically via MIPI (mobile industry processor interface).

For instance, radar sensors transmit radio waves and calculate the time taken for that particular wave to return—thus calculating the distance between the car and the obstacle. This returned radio wave can be thought of as sensory input and needs to be passed on to the sensor fusion.

What does sensor fusion do then? It combines delivered data, or in our case this radio wave signal, from disparate sources to create a coherent output. Sensor fusion plays a pivotal role in reducing uncertainty, as it compares signals from multiple sensors. Joint information reduces ambiguity, making the system less vulnerable to interference or collision.

While sensors fusion works just fine with a single sensor, they are much more effective with multiple sensor integration. Here, sensor fusion may take multiple measurements subsequently at different instants—to get a more definitive perception. Unfortunately, a single sensor isn't able to reduce uncertainty because of its obvious limitations. On the other hand, multiple sensors can enable the system to provide certain information, even in the case of partial failure, like a camera malfunction or a jammed transmitter.

Partly, why this happens because sensor fusions work along with the tenets of Conditional Probability. Conditional probability is a ground-breaking concept in probability theory, and it helps us understand the probability of an event

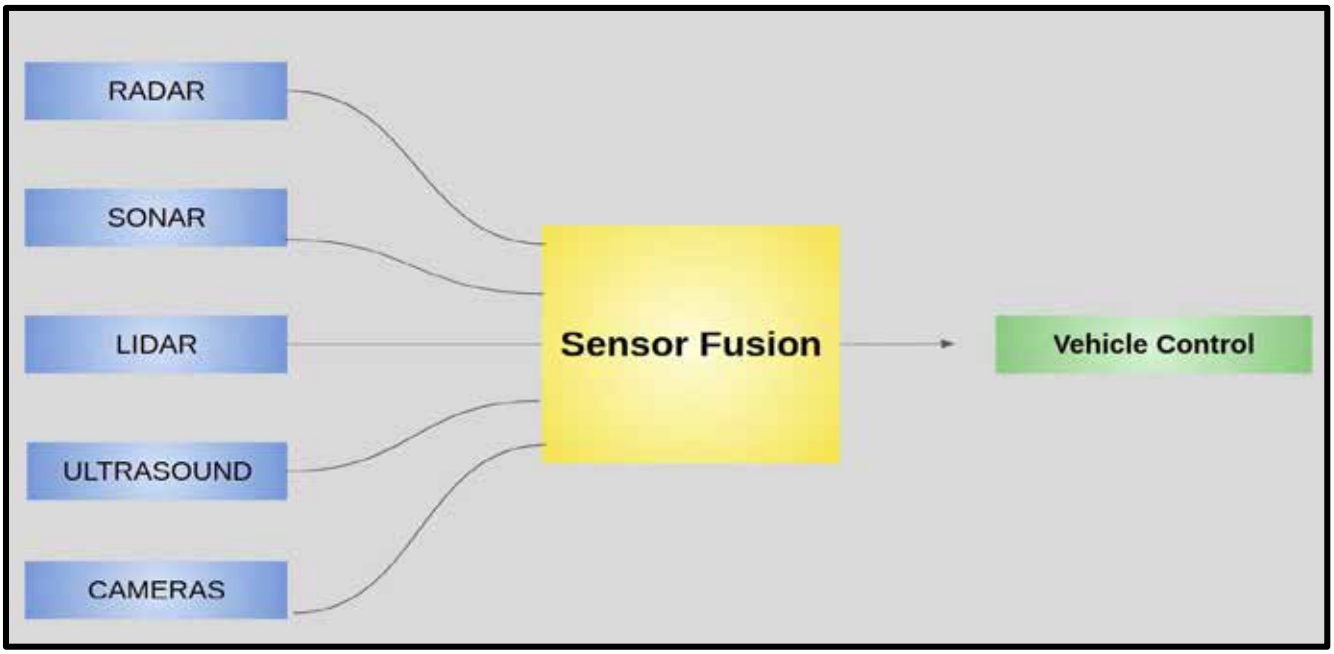

Representational Image

occurring (for convenience, let's call this event A) in relation to one or more probable events (say, event B). Simplifying, what are the chances of our event of interest A happening if event B did (or did not) take place.

Sensor fusion, after compiling data from multiple sensors, allows room for the vehicle to make a decision. Say the camera as well as a radar detect a nearby object—like a passing pedestrian that is six meters away. Sensor fusion does a couple of things here: it makes sure that this observed pedestrian is exactly six meters away by eliminating "noise" from accurate data. If that condition is true, it calculates how much the vehicle needs to slow down in order to avoid a collision. Then, it passes on the information to vehicle control, eventually leading to breaking or even stooping depending upon the velocity of the pedestrian and the car.

Concluding Remarks

Sensor fusion allows merging data from multiple sources and dramatically reduces the level of uncertainty. For safer autonomous cars, we require impeccable sensors and a state-of-the-art sensor fusion system. Sensor fusion attempts to replicate the functionalities of the human central nervous system. In fact, sensor fusion can compensate for the deficiencies with sensors—by identifying sensor failures or accuracy limitations. Very similar to human memory, sensor fusion can also use historic data points and use them to make befitting decisions. Indeed, autonomous cars are the future of transportation, and sensor fusion is the key to this exciting, limitless future!

References:

https://www.researchgate.net/profile/Jelena-Kocic/publication/329153240_Sensors_and_Sensor_Fusion_in_Autonomous_Vehicles/links/5c6c65c692851c1c9dee9030/Sensors-and-Sensor-Fusion-in-Autonomous-Vehicles.pdf

https://www.researchgate.net/profile/Wilfried-Elmenreich/publication/267771481_An_Introduction_to_Sensor_Fusion/links/55d2e45908ae0a3417222dd9/An-Introduction-to-Sensor-Fusion.pdf .❑

AUTHOR

TUSHAR BHAGAT
Director
Uffizio India
Software Pvt Ltd

Telematics Wire
Technology Driven | Futuristic Vehicle

Thematic Calendar

JUNE 2021

Simulation & Testing

MAY 2021

Emerging Technologies

JULY 2021

Smart & Shared Mobility

AUGUST 2021

Insurance Telematics

SEPTEMBER 2021

CV2021 Special

OCTOBER 2021

Chips & Modules, Auto Electronics

NOVEMBER 2021

Electric Vehicle

DECEMBER 2021

Autonomous Vehicle

For any contribution, please send an email
mgr_corpcomm@telematicswire.net (Yashi Mittal)

REAL TIME THEFT DETECTION AND FUEL MONITORING SYSTEM USING IoT

DHANRAJ P. SHETTY
Teltonika India

INTRODUCTION

The Internet of Things technology is the way forward for the oil and gas industry. Its widespread acceptance will contribute to a 0.8% increase within the global GDP.

The primary design goal is to style a system capable of monitoring the fuel information in real time whenever we visit petrol bunks to fill our vehicles. Whenever we visit bunks to fill tanks of our vehicles, they fiddle around while filling it from dispensers since they coded it internally with some digital error coding technique, which dispenses less amount of petrol and show right amount on the display of the dispenser. These frauds are been happening now-a-days in many bunks across the large cities and even small towns.

Another problem is fuel thefts once we park our vehicles at some place. Some people remove petrol pipe of auto with other techniques to steal petrol from vehicles. Today world needs digital techniques for measurement of any type of conventional like real time fuel monitoring and theft detection system using IoT. In traditional vehicle arrangement such multi-functional system isn't implemented like display fuel availability digitally, fuel dispensed from dispenser in bunks can't be measured & fuel theft from vehicles can't be avoided.

IoT uses a data-driven approach to supply real-time information regarding every detail through the connected assets within the petroleum industry. It powers the economic assets to sense the economic data and directly empowers the longer term of the petroleum business. With a wide acceptance of IoT solutions in the oil & gas sector, tons of data are being generated every day and are analyzed to predict future outcomes.

AREAS WHERE IoT-BASED FUEL MONITORING SYSTEM ARE OFTEN UTILIZED

1. Fleet Vehicles

The fleet industry is one among the most important sectors that utilize fuel as a resource. With the doorway of smart vehicles within the market, customer expectations have already gone up. The managers using the normal ways of monitoring the fleet had faced many communication issues and unrecognized fuel consumption patterns. It led to a mismanaged and the unnecessary way of fuel usage. Hence, with the advancement of technology and introducing IoT concepts, it has become easier to regulate the amount of fuel being used per vehicle in a fleet.

2. Mobile Tankers

During the export and import of petroleum products like oil and fuel, the mobile tankers are largely exposed to explosions and thefts. There are chances of un-avoidable circumstances if not taken care properly that can cause huge business losses. Hence, a sensible fuel monitoring solution is often installed to mitigate such challenges. The solution is well-equipped with advanced sensor devices connected to extract important fuel-related data. This data is further helpful in some ways like leakage detection, thefts, or any mishaps.

3. Tank Farms:3

Tank farms are industrial facilities that store petroleum products like fuel, petrochemicals, oil, etc., and transport them to other storage facilities for multiple applications in various locations. These farms are prone to fire explosions and major accidents with even the slightest of fuel leakages. Also, fuel leakages emit oil vapours which will explode with a small spark. If things remain unidentified thanks to any reason, it can cause an enormous loss to the whole property and emit harmful radiations which will affect human life to a large extent. Therefore, a sensible system like fuel monitoring are often installed to watch the real-time situation of the farm.

WHAT IS FUEL ECONOMY AND FUEL MANAGEMENT SYSTEM?

A fuel management system is a sub-division of a fleet management system that uses telematics-based analytical solution to capture fuel consumption data and improve fuel economy.

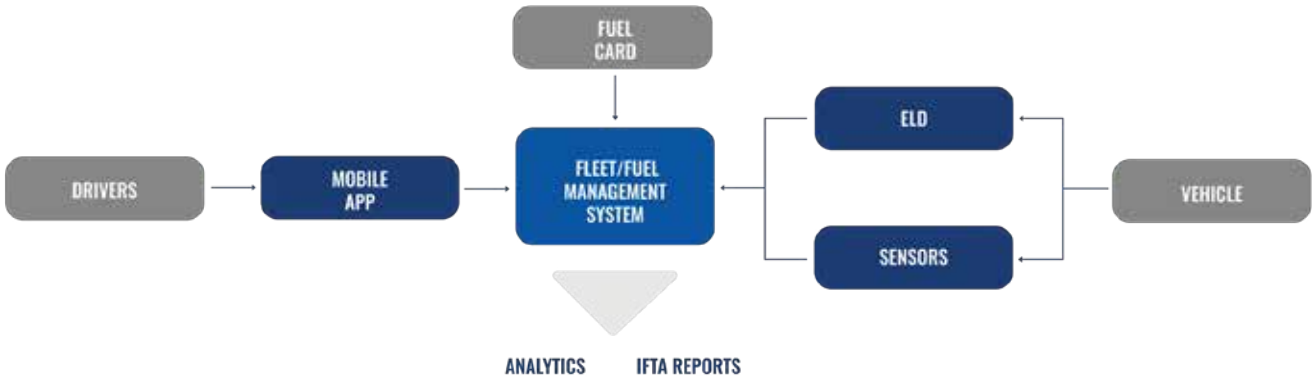

Fuel economy in transportation is an indicator of how long a vehicle can travel on a unit of gas/ fuel. In the US, it's expressed as MPG (miles per gallon). There are many factors that influence the fuel economy (i.e; type of vehicle, engine parameters, age of engine, etc.). However, it can be controlled through innovative ways.

Sensible driving behaviour can boost fuel economy from 10% to 40%. Timely and proper vehicle maintenance can increase fuel economy by 4%. Fuel variations (summer gas or ethanol-added gas) may improve fuel economy up to 4%.

PROBLEMS THAT FUEL MANAGEMENT SYSTEMS CAN SOLVE

Monitor fuel costs. Analysing fuel transaction data, it can determine the most economic fuel brand, compare fuel usage across vehicles fuel consumption break-up and generally improve your fuel buying behaviour.

Incorporate good driving habits. By collecting information about over speeding, harsh braking, and excessive engine idling, you'll support efficient drivers with additional incentives and provide training to drivers who have in-efficient driving habits.

Capture and prevent fuel theft and leakage. Fuel monitoring and anti-siphoning devices can update you on fuel amounts in on-site tanks and in trucks by sending alerts about fuel levels.

Calculate and report fuel taxes. Integrated with vehicle's GPS, a fuel management system can automatically calculate purchased fuel and travelled distance to help file your IFTA tax reports.

HOW IOT WILL HELP TO TRANSFORM GAS TANK LEVEL MONITORING

The Internet of Things (IoT) is uniquely positioned to deal with the most important challenges of gasoline tank level monitoring. By offering solutions that are easy to install, easy to maintain and equipped with automated reading mechanism with zero miss.

TECHNOLOGY:

An IoT gasoline tank level monitoring solution will employ several layers of technology:

1. The sensor to capture empty/ fill level data
2. A network to communicate the data from the sensors to the particular cloud
3. Software to analyze, and present the data to end users in an interface and/or to send and trigger alerts (text, email, push, etc.)

For sensors, important considerations include cost, installation ease, and measurement frequency and battery life. There are some inherent trade-offs between these attributes; for example, a sensor that measures once every 30 minutes may have a longer life than one that measures once every two hours. Likewise, a device that has a hardened weatherproof rating and has more durability will be more expensive than one that is not weatherproof-rated.

In addition, the mechanism by which the sensor measures fill level is vital for a reliable reading. The best measurement method may depend on the exact fuel we're measuring in the fuel tank in addition to factors such as the cost of the device. Sensor options include:

- Hall Effect Sensor/Float Gauge
- Ultrasonic Sensor
- Laser Sensor
- Radar Sensor
- Hydrostatic Sensor

A strong option for network may be a Low Power Wide Area Network (LPWAN). LPWANs are designed for IoT communication that's low bandwidth and long distance, and as a result, is optimized to be low cost and low battery drain. However, the simplest LPWAN type will depend upon the amount, location, and geographic spread of the gas tanks. Potential LPWAN options include:

- NB-IoT
- CAT-M or LTE-M
- LoRa
- Satellite

FUTURE OF FUEL FREE AUTOMOBILES IN INDIA

Currently, in India, pollution is widespread in urban areas where vehicles are its largest contributors and along-with concentration of industries and thermal power plants. Vehicular emissions are of particular concern since these are ground level sources hence have the utmost impact on the overall population.

India has made rapid strides in industrialization, and it's one of the ten most industrialized nations of the earth. But this status, has brought many unwanted and unanticipated consequences like unplanned urbanization, pollution and this risk of accidents.

Traditional gasoline powered vehicles are the primary reason of pollution. However with improved technology, the evolution of hybrid vehicles present a better alternative to our future. It provides higher mileage with low pollution The hybrid vehicle is one among the most recent and hottest alternatively powered vehicles. Hybrid electric vehicles are energy efficient cars or trucks that run on an indoor combustion engine of a gas vehicle with the battery and motor of an electrical vehicle. This leads to twice the fuel economy of gas vehicles. These hybrid electric vehicles consume fewer natural resources than gas vehicles and produce almost no emission fumes compared to the quality gas vehicle.

Concept of Fuel free automobiles:

Hybrid cars are one of the solutions for preserving air quality. Hybrid electric cars were created due to the shortfall in battery technology. The traditional batteries couldn't generate enough power. These batteries weren't sustainable for long trips. To mitigate this problem, onboard generator powered by an internal combustion engine was used. These cars were referred to as hybrid electric vehicles which are now being mass-produced by companies like Toyota and Honda.

The hybrid cars' major advantage is that they almost release zero emissions. These cars use the brakes to regenerate power to the batteries enhancing energy consumption. The cars reduce the dependency on fossil fuels because they're run on alternative fuels

Hydrogen as Future Fuel:

The use of Hydrogen gas as a fuel has recently been tested by mixing it with compressed gas (CNG) to form H-CNG. Hydrogen as an energy carrier provides the potential for a sustainable development particularly within the transportation sector. A hydrogen engine has the better potential for substantially cleaner emissions than other combustion engines. Other benefits arise from the wide flammability limits and therefore the high flame propagation speed, both allowing better efficiency.

In November 2020, Prime Minister Narendra Modi had announced the launch of National Hydrogen Energy Mission. This was also reiterated within the Union Budget 2021-2022 by minister of finance Nirmala Sitharaman, a crucial requirement for giant scale adoption of hydrogen, almost like CNG, is that the need for specialised fuel cells. ❑

AUTHOR

DHANRAJ P. SHETTY
REGIONAL SALES HEAD - NORTH INDIA - VEHICLE TELEMATICS
TELTONIKA INDIA

Enthusiastic, goal- and team-oriented sales professional with an experience in IoT solutions enabling customers to manage fleet accurately and efficiently. Working on India specific compliance product and increase the adoption of 4G devices.

Siemens acquires Nextflow Software to speed simulations with advanced meshless technology

Siemens announced that it has acquired Nextflow Software, an independent provider of advanced particle-based computational fluid dynamics (CFD) solutions. Nextflow Software will become part of Siemens Digital Industries Software, where its offering will expand the Simcenter™ software portfolio, part of the Siemens' Xcelerator™ portfolio of software and services, with rapid meshless CFD capabilities to accelerate the analysis of complex transient applications in the automotive, aerospace, and marine industries such as gear box lubrication, tank sloshing or electric motor spray cooling.

Siemens Digital Industries Software is already positioned strongly in the CFD market, providing both CAD-centric and high-fidelity solutions across mechanical and electrical design scenarios. The addition of Nextflow Software's Smooth-Particle Hydrodynamics (SPH) technology into the Simcenter portfolio can enable analysts to leverage the complementary nature of meshless and mesh-based solvers to capitalize on each of their strengths, opening the door to new applications that were previously difficult to address. The transaction closed on June 1, 2021. Terms were not disclosed.

Aviva to study Darwin autonomous vehicle trial

Aviva plc and Darwin Innovation Group are entering a five-year strategic partnership, beginning with collaboration on an autonomous vehicle trial. Darwin is trialling an autonomous shuttle at the Harwell Science and Innovation Campus in Oxfordshire.

Created by Navya, the vehicle, controlled by 5G and satellite connectivity, will be able to pick passengers up, transport them around the campus and drop them off at their destination, all without the involvement of a human driver. The electric shuttles will operate 24/7, which will allow the capture of data in different light and weather conditions and will transmit this data via 5G and satellite channels.

Darwin has carefully mapped out the campus and provided the shuttles with all the information they will need to navigate the area. The shuttles will be able to communicate with each other, and will be well equipped with sensors, so they can navigate without obstructing each other and can react to any unexpected obstacles.

Being involved in the testing and development phases of this trial means Aviva is well placed to react to the increasing automation of vehicles on UK roads. The trial will showcase the application of connected autonomous vehicles and allow Aviva to build its first comprehensive insurance model for this type of vehicle, which will evolve as the trial progresses.

Anritsu develops base station simulator for Korean eCall

Anritsu Corporation has developed for South Korean eCall base-station simulator/signalling tester MD8475B and eCall Tester MX703330E software as a solution for testing emergency response systems. This option can evaluate an in-vehicle system (IVS) supporting South Korean eCall over LTE (uses NG-eCall standard).

Anritsu's Signalling Tester MD8475B is a base-station simulator for simulating the mobile network configuration used by eCall. The eCall Tester MX703330E software emulates the communication sequence between the eCall IVS and PSAP center.

Adding this developed South Korean eCall option to the MX703330E supports performance of the South Korean eCall function test and end-to-end voice evaluation defined by ITSK-WD-19003 over a simulated LTE network. The spread of the LTE-Advanced communications system is accelerating adoption of larger-capacity in-cabin eCall telematics units and Anritsu is to support all-in-one gigabit LTE simulation and NG-eCall IVS evaluation with its Signalling Tester MD8475B for both speeding-up and cutting test costs for telematics units.

Japan: Toyota along with partners to build hydrogen-based city of future

Fukushima Prefecture and Toyota Motor Corporation announced that they have commenced discussions with various partners over building a city for a new future that makes use of hydrogen and technologies produced in Fukushima Prefecture.

Fukushima Prefecture, Toyota, and their partners will create an implementation model for hydrogen-based deliveries at supermarkets and convenience stores, which play a role both as essential urban infrastructure and as evacuation areas in times of disaster.

The implementation model will make use of hydrogen produced at multiple sites in the prefecture, including Fukushima Hydrogen Energy Research Field (FH2R), introduce several fuel cell (FC) trucks for deliveries, optimize operational management and hydrogen refilling schedules through the use of connected technologies, and carry out energy management that caters to the prevailing local conditions.

iTriangle
innovate • optimise • deliver

Refining & Redefining Vehicle Telmatics

GENUINELY !!
MADE IN INDIA

Basic Telematics Devices

TS101 Basic

- Track Trace and Driving Behaviour
- IP65 rating
- Accelerometer
- Track & Trace
- RS232*

AIS 140 Certified

Bharat 101

- Track Trace and Driving Behaviour
- Serial Port with multiple I/Os
- Optional CAN & RS485

OBD II

- Track Trace and Driving Behaviour
- Advanced Diagnostics through CAN & K-Line
- Plug and Play
- Accelerometer
- J1939

TS101 Advance

- Track Trace and Driving Behaviour
- Serial Port
- IP65
- 8 I/Os
- Accelerometer

Advanced Telematics Devices

DriveAssist - 4G LTE

- Track Trace and Driving Behaviour
- Android-based smart telematics device
- 5” touch screen
- P2P Live Streaming
- Advanced Diagnostics through CAN
- ADAS through dual cameras and Dash CAM

AIS 140 Certified

UX101 - 4G LTE

- Track Trace and Driving Behaviour
- Video Telematics
- Advanced Diagnostics with 3 Channel CAN
- Wifi & BLE*

Solution for Electric Vehicles

TS101 Basic EV

- 9V-90V support
- State of charge & range anxiety
- Advanced diagnostics through CAN

Note:
- Features may vary based on the devices & requirements.
- All of our devices support FOTA and have an internal battery

For more information:
www.itriangle.in
sales@itriangle.in
+91-9739974445

Sense Photonics announces MultiRange capability on the newest lidar system

Sense Photonics announced they have developed a system which delivers high resolution long-range capability and a mid-range capability with a wider field-of-view (FoV) simultaneously in a single shot using a single sensor. Sense's new MultiRange™ capability allows a vehicle to detect the road profile, road debris, and lane markings at long distances and also detect traffic in adjacent lanes without requiring multiple sensor heads.

Sense has been able to accomplish MultiRange performance by a combination of its proprietary VCSEL laser array, which houses tens of thousands of lasers on a single substrate, paired with its proprietary CMOS SPAD silicon receiver, which can detect single-photon-level detail with every return. Similar to a car's headlights, Sense's emitter technology uses a diffused beam to simultaneously illuminate the entire FoV. Global shutter acquisition allows for a consistently high-resolution point cloud across the FoV without motion artifacts.

TomTom launches 7-Inch HD satnav-TomTom GO Expert

TomTom announced the launch of the TomTom GO Expert – the ultimate satnav for professional truck, van and bus drivers. With a 7-Inch high-definition (HD) touchscreen display and a new processor, the GO Expert is 4x faster than previous satnavs and packed with powerful features including smart routing for large vehicles and accurate traffic information which make every drive more efficient.

Equipped with TomTom's accurate and reliable maps, professional drivers will appreciate that maps can be updated on their GO Expert up to 3x quicker via Wi-Fi®. Beyond navigation, a new processor and increased memory space means the satnav is super-responsive.

Other features include fuel stations, parking spots and service centers which have all been carefully selected to meet the needs of professional drivers. Additionally, new and improved moving lane guidance means drivers can navigate confidently at tricky intersections and highway exits. They can also connect their phone to the device via Bluetooth® wireless connectivity getting access to TomTom's trusted Traffic information. TomTom Traffic helps drivers to find the fastest routes and get accurate estimated times of arrival, as well as Speed Camera Alerts – both essential for the professional driver.

Toyota Motor's new multimedia system to enhance in-car user experience

Toyota Motor North America (TMNA) introduced a new multimedia solution. for a personalized and intelligent in-vehicle experience. The new system will make its debut as a Lexus Interface multimedia system with the launch of the all-new Lexus NX in the fourth quarter of 2021.

For the new multimedia system, which was developed over the course of three years, the company has collaborated across the TMNA Connected Technologies group as well as with teams from partner companies Toyota Connected and Toyota Motor Corporation – involving hundreds of team members.

The new system features multiple touchscreen options from 8- inches up-to 14-inches with a volume knob. It comes with a navigation system featuring 100% cloud capability allowing faster, more accurate directions and mapping, claims the company. OTA updates will allow real-time updates for navigation mapping and other enhancements across the system's lifetime.

It also features Human Machine Interface (HMI) that provides an enhanced user interaction through sight, touch and voice based on graphical user interface (GUI), voice interface and unique North American animation.

Keysight releases its C-V2X ADE solution

Keysight Technologies, Inc. announced its Keysight C-V2X Autonomous Drive Emulation (ADE) solution, which enables functional, protocol and radio frequency (RF) measurements on 3GPP Release14 C-V2X devices from the Keysight UXM 5G Wireless Test platform.

Keysight's C-V2X ADE solution on the UXM 5G Wireless Test platform supports a range of test types that will support future releases of 5G new radio (NR) C-V2X, to ensure investment protection including:

- Transmitter Testing: Power, error-vector magnitude (EVM), frequency accuracy, in-band emissions, adjacent channel leakage ratio (ACLR).
- Receiver Testing: Sensitivity, maximum input level, adjacent-channel selectivity.
- Protocol Testing: Ensure correct PC5 link protocol, V2X message types and content are sent and received. Comprehensive coverage of C-V2X and LTE protocol test cases for GCF and PTCRB device certification testing.
- Application Layer Testing: Incorporate application-level testing that integrates C-V2X scenarios with HIL systems.

Frost & Sullivan releases its report on telematics in Indonesia

Frost & Sullivan's recent analysis on the Indonesian connected trucks telematics market finds that, currently, 96% of companies are using telematics in their fleets with communication functions sent over 3G/4G, leveraging real-time information for efficient operation of their fleets. The commercial vehicle telematics market in Indonesia is growing at a slow rate due to the impact of the COVID-19 pandemic. However, multiple vendors are populating this fragmented sector and competing to gain share. This analysis focuses on commercial vehicles comprising light-duty truck (LDT), medium heavy-duty truck (MHDT), and heavy-duty truck (HDT) plying in the transport & logistics and postal & delivery services sectors. It analyzes the usage of and interest in telematics and fleet management solutions.

Companies are most interested in the telematics features geared toward safe driving analysis and vehicle durability. Key findings include:

- When selecting a telematics system, the most important criteria are product reliability, its ability to fulfill operational challenges and track real-time data, followed by compliance, safety, and cost-savings.
- Telematics solutions are mainly installed in transport (93%), transport & logistics (79%) and postal & delivery (50%) in vehicles that are older than 10 years and operate long distances. The top three usages of vehicle-related features in telematics are vehicle inspection reminder (88%), vehicle malfunction alert (86%), and vehicle maintenance alert (85%).
- Currently, 65% of companies' employ on-demand operation patterns and flexible routes, led by transport and logistics companies.
- Currently, 88% of companies use telematics solutions as a standard function with set features, while 12% are using customized features.

OBD market projected to touch US$ 22 B by 2031 – TMR

Fueled by vast possibilities, the global automotive on-board diagnostics market is projected to reach worth of US$ 22 Bn by 2031, clocking CAGR of ~5% from 2021 to 2031. Key points of automotive on-board diagnostics market study are- (1) Prospect of real-time insurance driving telematics (2) Cloud diagnostic managers muscling their way into market (3) Uptake of on-board diagnostics bolsters innovations in sensor technology (4) Automotive on-board diagnostics market: key driving factors and avenues (5) Automotive on-board diagnostics market: key participants

EV charging stations to reach $103.6 billion by 2028

According to a market research report titled "Electric Vehicle Charging Stations Market by Charging Type (Level 1, Level 2, DCFC), Connection Type (Pantograph, Connector, Wireless), Component (Hardware, Software, Services), Mounting Type (Wall, Pedestal, and Ceiling) Vehicle Type, End User, and Geography – Global Forecast to 2028'", published by Meticulous Research®, the electric vehicle charging stations market is expected to grow at a CAGR of 26.4% from 2021 to 2028 to reach $103.6 billion by 2028. By volume, this market is expected to grow at a CAGR of 31.1% from 2021 to 2028 to reach 11.6 million units by 2028.

Frost & Sullivan releases its report on global automotive aftermarket

The rapid adoption of digitization to mitigate the adverse impact of COVID-19 on the global automotive aftermarket has fueled investments in this space. Although the aftermarket demand for replacement parts and accessories declined 8.8% in 2020, online sales are rising as the global market recovers. They are expected to reach $478.8 billion by 2025 at a 5.7% compound annual growth rate (CAGR) from $362.2 billion in 2020.

Usage based insurance market to be worth $66.8 billion by 2026

According to the new market research report "Usage-Based Insurance Market for ICE & Electric Vehicle by Package (PAYD, PHYD, MHYD), Technology (OBD-II, Black box, Smartphone, Embedded), Vehicle Age (New, Old), Device Offering (BYOD, Company Provided) and Region – Global Forecast to 2026", published by MarketsandMarkets™, the Usage-Based Insurance Market is projected to reach USD 66.8 billion by 2026 from an estimated USD 19.6 billion in 2021, at a CAGR of 27.7% during the forecast period. The growth of the Usage-Based Insurance Market is influenced by factors such as the increasing sales of telematics-equipped vehicles and government regulations on safety and telematics services. In addition, the anticipated increase in demand for connected cars and lower insurance premiums compared to regular insurance are expected to boost the market growth. Therefore, the Usage-Based Insurance Market is expected to witness significant growth in the future.

Usage based insurance market to reach $125 billion by 2027

Global Market Insights Inc. has recently added a new report on the usage-based insurance market which estimates the market valuation for UBI will cross USD 125 billion by 2027. Growing adoption of in-vehicle connected insurance solutions for reducing unanticipated claims and promoting safe driving practices is driving industry growth.

The growth in UBI market is attributed to the growing automobile industry, technological advancements in both developing & developed countries, and shifting consumer demand toward more efficient smart vehicles. The increasing production of passenger & commercial cars is driving the adoption of usage-based insurance products. The widespread adoption of in-car technologies to attract more customers to UBI as they are willing to share their driving information for personalized insurance quotes is another factor fueling the market demand.

The Pay-As-You-Drive (PAYD) segment is anticipated to grow at a CAGR above 20% from 2021 to 2027. PAYD plays an important role as it helps in monitoring the mileage driven and pricing policies based on that mileage. PAYD promotes safe driving as customers will be charged more in case they do not drive well. Under the PAYD programs, the companies offer several new products ranging from low-mileage discounts to short-term and on-demand products. This creates more opportunities for enterprises to offer more personalized insurance services to sustain stiff competition.

The smartphone segment is expected to hold above 15% of the usage-based insurance market share in 2020 owing to the widespread adoption of smartphone-based telematics applications that provide various vehicle parameters such as driving behavior and fuel consumption. The emergence of smartphone technology has made UBI more accessible to consumers and affordable for insurance providers. This is anticipated to support the market growth over the forecast period.

The passenger vehicle segment is projected to witness market share over 80% by 2027 propelled by the widespread adoption of Blackbox and OBD devices to monitor and improve service areas such as navigation, information, and vehicle health. The increasing demand to promote passenger safety is enabling SMEs to deploy UBI solutions.

Europe UBI market is set to grow significantly with a CAGR of more than 20% during 2021 to 2027 driven by the enforcement of more stringent fuel regulations and mandatory OBD requirements by the European Commission in the region. In addition, the presence of several automobile manufacturers and their growing brand value & sales are anticipated to support the market growth over the forecast period.

Several companies operating in the region are focusing on strategic partnerships with insurance providers to launch innovative UBI solutions for customers. For instance, in May 2019, TrueMotion, a leading smartphone-based telematics platform, partnered with Unipol Group, a leading automotive insurance provider in Italy, to launch Italy's first smartphone-only telematics program. This partnership helped the company to provide next-generation auto insurance across the country.

The insurance companies operating in the market are focused on developing innovative solutions. For instance, in May 2020, Edelweiss General Insurance (EGI) a cloud native insurer, launched an innovative app-based Motor OD floater policy Edelweiss SWITCH. The new UBI solution launched under IRDAI's Regulatory Sandbox will allow vehicle owners to SWITCH their motor insurance on and off based on usage. This launch helped the company to strengthen its portfolio and acquire a competitive position in the market.

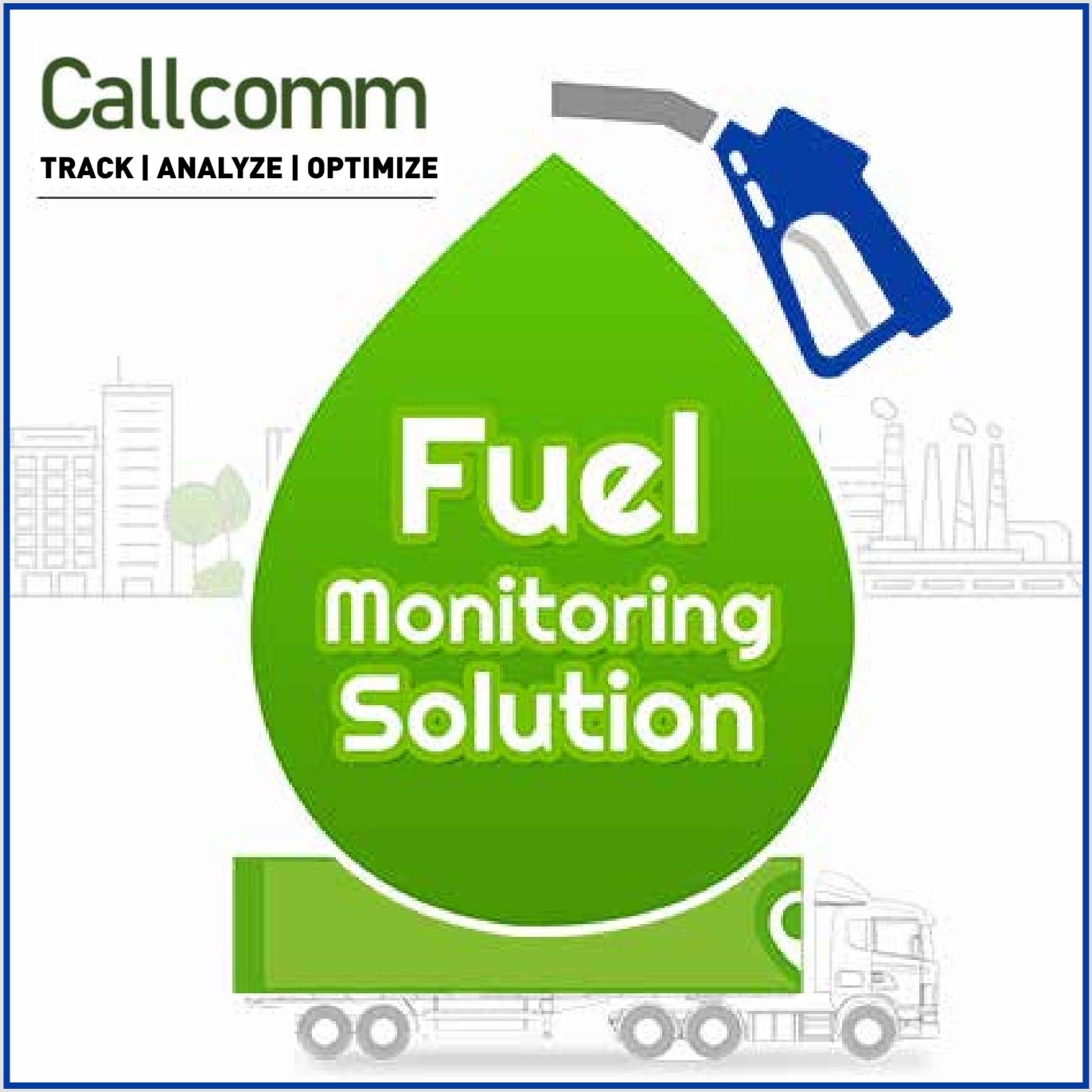

Decrease Fuel Theft by up to

90%

Reduce Fuel Cost up to

15%

Call Us Anytime
+91 9989094607

Email Us
callcommcba@gmail.com

Parkopedia new integrated platform to facilitate in-vehicle payments

Parkopedia launched a new multi-domain payment platform to enable drivers to seamlessly pay for parking, Electric Vehicle (EV) charging, fuelling and tolls. The platform is being rolled out in 2021 with automaker and partner announcements to follow shortly and will be accessible via vehicle infotainment systems in combination with website and mobile apps.

The platform makes it easier for automakers to aggregate a large number of suppliers and payment providers into a single, integrated payment platform with single sign-on capability for drivers.

Leopard Imaging launches driver monitoring system cameras

Leopard Imaging Inc. recently launched driver monitoring system (DMS) cameras LI-OV2311-IR-GMSL2 and LI-AR0144IVEC-GMSL2 to support real-time assessment of the driver's current cognitive state. Driver monitoring system is an advanced safety system that uses cameras to track driver distraction, issuing an alert or warning to get the driver's attention back on the road. When detecting risks such as drowsiness or distraction, the DMS camera alerts the driver and integrated safety systems—preventing injury and helping drivers focus on the road.

Leopard Imaging's new cameras aim to reinvent road safety with advanced features and applications using global shutters and infrared light-emitting diodes (IR LED). LI-AR0144IVEC-GMSL2-055H is equipped with ON Semiconductor In-Vehicle Experience Camera Module (IVEC) AR0144, and LI-OV2311-IR-GMSL2-050H is equipped with OmniVision 2 MP CMOS image sensor OV2311. Implementing ON Semiconductor and OmniVision's technology into Leopard Imaging's cameras helps capture insightful image data at higher resolution—improving gesture recognition, eye tracking, head roll movement, machine vision, augmented reality, and more.

Bird Three, an eco-conscious shared electric scooter

Bird has unveiled Bird Three, the eco-conscious electric scooter specifically designed for shared use. Presented as the most durable, most connected, safest, and environmentally friendly vehicle, the third-generation Bird e-scooter incorporates a series of technical updates.

The Bird Three has a longer wheelbase, a dual-sensor throttle, and a triple braking system with dual independent handbrakes, and an autonomous emergency braking system. The Bird Three is equipped with a battery with a capacity of up to 1 kWh. The battery has a claimed lifespan of at least 14,000 miles (22,500 km) and is also encased in hermetically sealed, tamper-proof, IP68-rated protection to keep it safe from dust, water, and theft.

The electric scooter is designed using aerospace-grade A380 mated to an AL6061 extrusion that provides the ability to withstand the rigors of shared use and is backed by more than 60k simulated impact tests. It features automotive-grade, self-sealing pneumatic tires that deliver a soft and stable ride overall surface types without risk of getting a flat or requiring complicated suspension systems.

More than 200 diagnostic sensors monitor each component of Bird Three in real-time to ensure a safe ride each and every time. The scooter can automatically send diagnostic data to Bird when it needs to be repaired. In addition, as soon as a problem is detected that makes it unsafe to continue driving, an automatic emergency braking system is activated to prevent an accident. Besides, high-powered automatic lighting certified to the highest standards of road safety provides superior visibility while riding, even during daylight hours.

SWR and Xperi partner to advance the radio listening in connected vehicle

DTS® and Südwestrundfunk (SWR), announced the integration of ARD-Eventhub metadata distribution platform with DTS AutoStage™.

The integration means that all broadcaster metadata, such as program information, station logos, album/artist imagery, etc., on the ARD platform for SWR stations will be accurately, consistently, and seamlessly represented in the DTS AutoStage ecosystem. This delivers a cutting-edge in-vehicle entertainment experience to German owners of vehicles supporting DTS AutoStage platform, such as the latest Mercedes-Benz S-Class.

DTS AutoStage also enables continued station listening from local broadcast stations via streams provided by SWR when the vehicle drives out of broadcast range. Importantly, all SWR stations will be able to easily integrate into the platform and manage their services, station information, and streams in one place.

HAAS Alert announces Safety Cloud® integration with Samsara's onnected Operations Platform

HAAS Alert and Samsara announced an integration between HAAS Alert's Safety Cloud collision prevention platform and Samara's Connected Operations Platform, enabling Samsara-equipped fleets to activate their vehicles on Safety Cloud through the Samsara solution. With the help of this partnership, HAAS Alert's safety solution will be accessible for fleets using their existing Samsara devices, requiring no additional hardware installation.

HAAS Alert Safety Cloud lowers collision risks by enabling emergency vehicles and work trucks to send out real-time digital safety alerts to warn drivers in advance of upcoming hazardous situations on the road. Through this integration, Samsara's gateways will send real-time vehicle data to Safety Cloud, which then delivers alerts to approaching motorists through Waze. Motorists can receive these alerts through mobile devices, Apple CarPlay, Android Auto, or other compatible vehicle information systems.

Daimler Mobility licenses its blockchain software to bloXmove

Daimler Mobility AG has awarded the in-house developed Mobility Blockchain Platform to the mobility start-up bloXmove as part of a licensing agreement. The software has been expanded and incubated in the last three years as part of the Blockchain Factory together with selected partners. With this step, Daimler Mobility wants to facilitate further developments of the software project, further network enlargement and win over ecosystem partners.

The newly founded start-up bloXmove focuses on cooperative, urban mobility and plans to build a fluid and integrated mobility infrastructure based on the software developed by Daimler Mobility. The vision of bloXmove: a global alliance of all mobility providers to reduce complexity for users. The parties have agreed not to disclose the terms of the transaction.

door2door to develop ride pooling software for Local Motors' Olli 2.0

Local Motors announced, they've reached a strategic agreement with door2door to develop ride-pooling software for Local Motors' electric autonomous vehicle, Olli 2.0. This is the first step between the two parties in making Olli an integrated ecosystem and the most efficient, flexible solution for municipalities and private campuses in Europe.

door2door's mobility analytics software will determine optimal parameters for mobility operators to run autonomous shuttles, supporting transit planners with simulations and demand/supply analysis. Further, door2door's on-demand fleet management software will be deployed on Olli's onboard HMI and passenger's mobile phone. Riders will be able to call Olli to their location and define a drop-off location within the vehicle's operating domain. In order to fully optimize the joint autonomous shuttle service, door2door's pooling algorithms will allow for shared rides.

Verizon Connect introduces a new tracking device

Verizon Connect has introduced its asset tracking solution that is easy to conceal, self-install and self-manage, to help customers reduce theft.

Designed by Verizon Connect for customers who are running their mobile business on the Verizon Connect Reveal fleet management platform, the new asset tracker device was built for easy self-installation, customizable check-in rates, and the replaceable battery significantly extends the life of the device and its value. Now, generators, trailers, storage containers, yellow iron and other equipment can be located and managed remotely — as well as their vehicles, drivers and jobs — online through the Verizon Connect Reveal fleet management platform or the Verizon Connect Spotlight app.

Apple's Project Titan: sophisticated V2V communications for autonomous vehicles

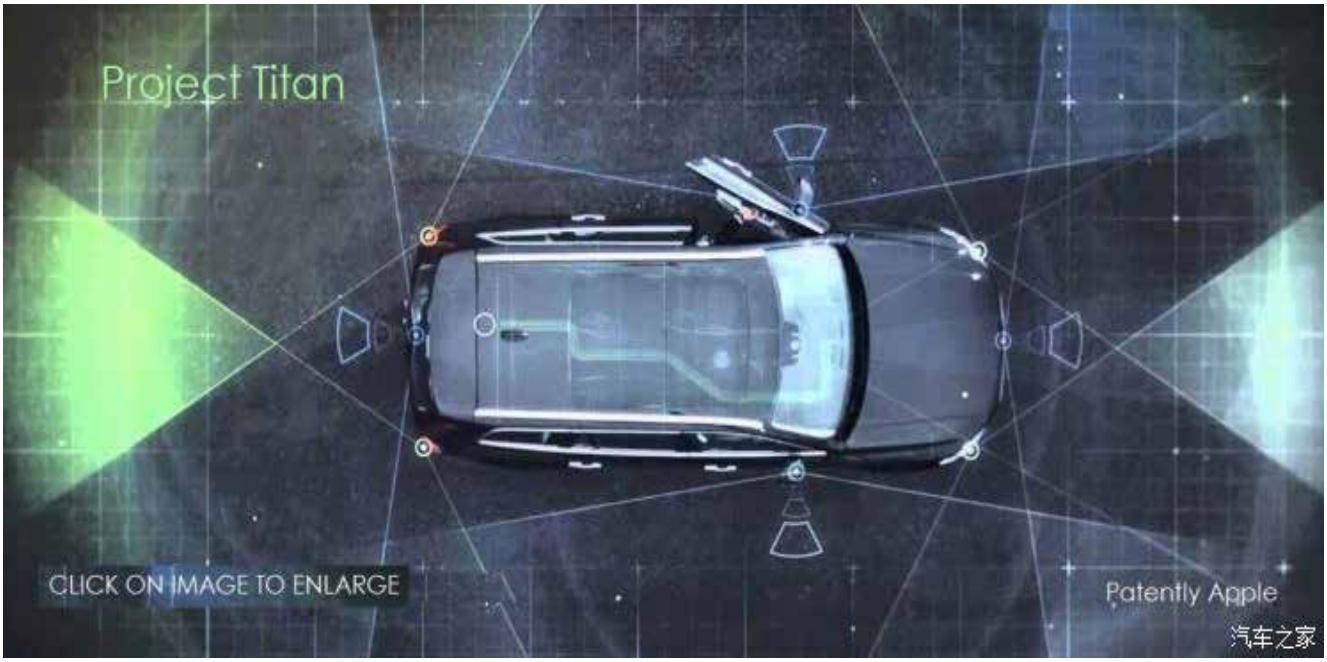

The US Patent & Trademark Office published a patent application from Apple that relates to Project Titan. More specifically, the patent relates to vehicle-to-vehicle communications systems that directly relates to future automated vehicles.

In Apple's patent background they explain that vehicle-to-everything (V2X) and Vehicle-to-vehicle (V2V) communications are automobile technologies designed to allow automobiles to communicate with each other and with other devices (e.g., pedestrian smartphones and traffic lights). These technologies have the potential to redefine transportation by providing real-time, highly reliable, and actionable information flows to enable safety, mobility and environmental applications. Additionally, these techniques may pave the way to connected and automated driving (CAD).

Apple's invention covers techniques that relate to the selection of frequency resources, by User Equipment (UE), for autonomous mode operation of UEs. In some implementations, a UE, in a sensing window, may make measurements relating to power transmitted by other UEs and receive sidelink control information (SCI) transmitted by the other UEs. Based on these measurements, the UE may selectively exclude spectrum resources, from the set of possible resources, to obtain a final set of resources from which the UE may select resources to use for transmitting.

IDA Ireland

Why Ireland for Connected and Autonomous Vehicles

Ireland has become a global technology hub of choice when it comes to next generation of business and technology for connected mobility.

Transport is changing and Ireland is in the driving seat. Global companies that innovate are most likely to succeed, particularly in the fast-changing automotive and mobility space.

IDA Ireland, your partner on your investment journey

Ireland's inward investment promotion agency, IDA Ireland, is a non-commercial, semi-state body promoting Foreign Direct Investment into Ireland through a wide range of services and supports. We partner with potential and existing investors to help them establish or expand their operations in Ireland.

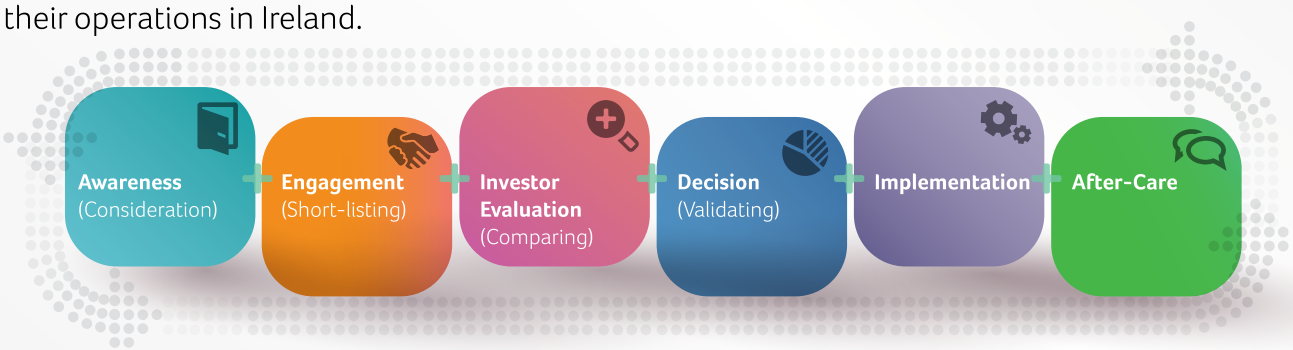

- Hosted Site Visits
- Introductions to:
  - Peer Companies
  - Industry Associations
  - Professional Services
- Employment Permits & Visas
- Property Solutions
- Collaborative Research Opportunities
- Funding Programmes & Incentives
- Public Relations & Media Support
- Requests for Information & Data Gathering

For further information contact IDA Ireland

@IDAIRELAND

e India.IDA@ida.ie

Ireland. We make it happen.

www.idaireland.com

Anritsu upgraded Network Master Pro MT1000A Synchronous Measurement Function for 5G Mobile Network I&M

Anritsu Corporation has announced an upgraded synchronous measurement function for the company's Network Master Pro MT1000A, the industry's smallest-in-class tester supporting mobile networks up to 100 Gbps. Fifth-generation (5G) networks are expected to support increasing future numbers of applications and services, such as hi-definition video streaming, autonomous driving, IoT sensing, smart factories, etc. By upgrading this MT1000A test function, Anritsu hopes to facilitate construction of time-synchronous infrastructure, a key technology supporting 5G networks.

The MU100090B is a GNSS* disciplined oscillator supporting GPS, Galileo, GLONASS, Beidou and QZSS. It receives signals from each of these GNSS to output a UTC-traceable reference time signal as well as 10-MHz signals as a time-synchronous, high-accuracy reference timing supplied to the portable MT1000A, supporting SyncE Wander and PTP tests up to 25 Gbps for measuring network time synchronization.

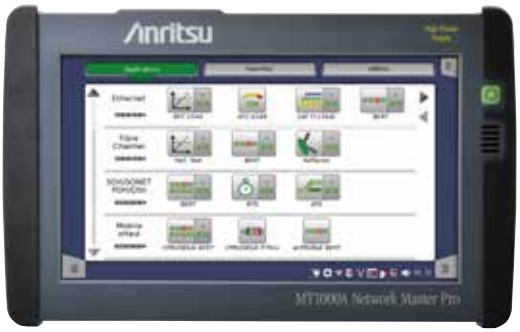

Furthermore, multiple MT1000A testers at various remote sites can be operated and monitored from the central office using the Site Over Remote Access MX109020A (SORA) software to help quickly pinpoint synchronization problems.

International Truck launches Cummins X15 over-the-air engine calibrations

International Truck announced the upcoming availability of Cummins® Connected Software Updates™ and programmable trim parameters through Navistar's OnCommand® Connection portal, enabled by Navistar's factory installed second-generation telematics device.

The two digital applications from Cummins, together with OnCommand Connection, will allow customers the capability to conduct over-the-air (OTA) approved engine calibrations and programmable parameters for Cummins X15TM engines. All International® LT® Series and LoneStar® models equipped with Navistar's second-generation factory-installed telematics device, which began production in mid-2019, will be able to take advantage of the new features on Cummins X15 engines.

This integration builds upon International's OTA capability on the International® A26 engine – making International OEM to use a single, factory-installed device to equip multiple engine models with remote programming.

NovAtel launches automotive GNSS positioning module for ADAS and autonomy

NovAtel introduces the PIM222A, part of a new family of automotive GNSS positioning products for advanced driver assistance systems and autonomy.

PIM222A leverages SPAN technology from NovAtel to provide accurate position data in urban environments that challenge GNSS availability. Deeply coupled GNSS receivers and inertial measurement units (IMUs) ensure continuous availability of position, velocity and attitude, even when satellite signals are briefly blocked.

The PIM222A, which was created in collaboration with STMicroelectronics, is a lightweight, power-efficient, solder-down module that maximizes flexibility for integration. The receiver design can be applied to low-, medium- and high-production volumes while retaining a rich array of features, including options such as multi-frequency, multi-constellation, RTK and dual-antenna precision.

The degree of slow-speed and initialization performance is maximized with the dual antenna feature, enabling the best possible positioning performance in all ADAS and autonomous driving situations.

Solera acquires driver behaviour management company- eDriving

Solera Holdings, Inc. announced that it has acquired eDriving, the digital driver risk management partner for many of large commercial fleets. This acquisition expands Solera's position as global data intelligence and technology leader serving all constituents engaged in vehicle lifecycle management.

eDriving identifies and remediates risky commercial driver behavior. The company's flagship product, Mentor by eDrivingSM, provides a unique smart-phone-based driver safety solution that uses telematics to analyze operator behavior in real time, improving roadway safety. It also generates a FICO® Safe Driving Score to benchmark drivers against their peers and deploys safe-driving e-Learning programs in an easy-to-implement, highly secure environment.

The acquisition of eDriving allows Solera to deepen its focus beyond the vehicle into driver behavior and risk analytics.

AUTOCRYPT partners with SHIELD Automotive Cybersecurity Centre of Excellence

AUTOCRYPT announced that the company had officially partnered with the SHIELD Automotive Cybersecurity Centre of Excellence, hosted by the University of Windsor, to prioritize research and development in securing connected and autonomous vehicles.

The partnership with SHIELD follows AUTOCRYPT's recent expansion into the North America region with the opening of its first North American office in Toronto. The company most recently raised $15M USD in its Series A funding.

Xiaomi-backed fund invests in autonomous driving startup ZongMu Technology

ZongMu Technology has announced the completion of its Series D funding with a total of $190 million raised. The newly-fulfilled financing was advanced in three tranches. Notably, the D3 round was led by Xiaomi Changjiang Industrial Fund, a fund backed by Chinese smartphone giant Xiaomi.

ZongMu Technology said it is among the first companies Xiaomi invested in after the smartphone maker announced its foray into intelligent EV domain on March 30.

ZongMu Technology has teamed up with many Chinese automakers to offer them autonomous driving technologies. Its autonomous valet parking technology has been applied in a number of vehicle models like the Hongqi E-HS9, the Dongfeng VOYAH FREE, and the UNI series of Changan Automobile. The company announced in late March that it had contracted with Meituan to supplier the latter with 4D millimeter radars.

Fisker and Foxconn sign agreement to develop electric vehicle

Fisker Inc. has signed framework agreements with Hon Hai Technology Group (Foxconn) supporting joint development and manufacturing related to Project 'PEAR' (Personal Electric Automotive Revolution), a program to develop a new electric vehicle.

Under the agreements, Fisker and Foxconn will jointly invest into Project PEAR, with each company taking proceeds from the successful delivery of the program. Fisker will work with Foxconn on a new lightweight platform designated 'FP28,' leveraging technological expertise from each company to support Project PEAR and potential future vehicles.

In support of the work on Project PEAR, the two companies have established a co-located program management office between the U.S. and Taiwan to coordinate design, engineering, purchasing, and manufacturing operations. Following an extensive review of potential U.S. manufacturing sites, the two companies will expedite a manufacturing plan capable of supporting the projected Q4 2023 start of production.

Solera to acquire Omnitracs and DealerSocket

Solera Holdings, Inc. announced that it will acquire Omnitracs, a complete fleet management platform, and DealerSocket, a leading SaaS provider to the automotive industry. These acquisitions will extend Solera's position as the preeminent global data intelligence and technology leader serving all constituents engaged in vehicle lifecycle management.

These acquisitions will build upon Solera's strategy to minimize complexity and reduce friction at all touchpoints in the vehicle lifecycle with fully integrated intelligent technology platforms.

With Omnitracs, Solera will offer a unified platform that encompasses safety, productivity and maintenance solutions for commercial fleets. The addition of DealerSocket's platform completes an end-to-end suite of solutions for automotive dealerships, combining customer acquisition and retention solutions, inventory management, dealership management systems, e-titling and a unique service and maintenance platform.

ZF and Mobileye to develop ADAS for Toyota

ZF and Mobileye have been chosen by Toyota Motor Corp. to develop Advanced Driver Assistance Systems (ADAS) for use in multiple vehicle platforms starting in the next few years. As part of the agreement, ZF, producers of automotive cameras driven by Mobileye technology, will also supply its Gen21 mid-range radar and be responsible for the integration of camera and radar in Toyota vehicles.

ZF and Mobileye will collaborate closely to produce advanced camera technology integrated with ZF radar technology to power key advanced driver assistance platforms in Toyota vehicles. Mobileye's EyeQ®4, advanced application-specific vision computing system-on-a-chip (SoC) currently available, will be combined with ZF's Gen21 mid-range radar technology to precisely interpret the environment around Toyota vehicles. Together, these technologies will help prevent and mitigate collisions while yielding best-in-class lateral and longitudinal vehicle control.

Accel-KKR acquires GPS Insight; merges with portfolio companies InSight Mobile Data and Rhino Fleet Tracking

Accel-KKR announced that it has acquired GPS Insight. Founded in 2005, GPS Insight provides SaaS-based fleet management software and complementary solutions for Class 3-6 fleets in the United States and Canada. Simultaneously, Accel-KKR announced that it is merging GPS Insight with InSight Mobile Data and Rhino Fleet Tracking, two existing Accel-KKR portfolio companies focused on fleet management, field services and GPS tracking.

Together, GPS Insight, IMD and Rhino serve over 11,000 accounts spanning more than 30 industries and over 225,000 vehicles. Customers from national enterprise accounts, government entities, energy, utilities to small field services teams rely on GPSI, IMD and Rhino for a wide range of mission-critical tasks including GPS tracking, fleet utilization, scheduling and dispatching, and driver safety and compliance.

Continental (CES) to integrate TriEye's SWIR in its driver monitoring system

TriEye announced its collaboration with Continental Engineering Services (CES). This collaboration will focus on the implementation of SWIR imaging systems in Driver Monitoring Systems.

With TriEye's technology, Continental Engineering Services will be able to offer its customers valuable sensing solutions such as enhanced user identification capabilities or precise seat belt detection.

InGaAs-based SWIR cameras have been around for decades, serving the science, aerospace, and defense industries, but have not yet been used for mass-market applications due to their high costs and large form factor. Based on advanced nanophotonics research, TriEye and its strategic manufacturing partner enable the fabrication of a cost-effective, CMOS-based HD SWIR sensor at scale, that is mass-produced and small in size.

May Mobility testing a Toyota Sienna equipped with its autonomous driving kit

May Mobility announced that it is testing a Toyota Sienna equipped with its autonomous driving kit (ADK) and will work with Toyota to add the vehicle to public shuttle fleets in 2022.

The automated vehicle based on the Sienna features Toyota's Vehicle Control Interface (VCI), allowing for seamless technology integration and robust operation of key vehicle control systems, such as steering, brakes, and acceleration.

Modifications to the Sienna include the addition of LIDAR, RADAR, and camera sensors, along with the compute and control modules that make up May Mobility's autonomous driving kit. The May Mobility Toyota Sienna shuttle is currently being tested on public roads in Ann Arbor. Additional shuttles are under development and will be ready for use in public fleets in 2022.

NXP's automotive processor to use Sibros' OTA connectivity platform

Sibros has announced their collaboration with NXP Semiconductors. Through the collaboration, Sibros offers pre-integrated system solutions pairing its Deep Connectivity Platform™ with NXP's automotive processors, including its new S32G2 vehicle network processors and GoldBox service-oriented gateway reference platform.

NXP's S32G2 processors are built to satisfy the performance, networking, safety and security demands for the modern software-defined vehicle featuring new architectural innovations that accelerate the product development for advanced in-vehicle experiences and connectivity use cases.

Sibros' modular Deep Connectivity Platform is a OTA solution that combines remote software updates, data logging and diagnostics on a single system that works with all in-vehicle ECUs. Utilizing an S32G2-based service-oriented gateway that is centrally located in the vehicle with accelerated networking, advanced vehicle-wide data logging and component software updates can be performed.

The combined Sibros-NXP solutions support a wide range of new and innovative connectivity use cases spanning location based services, driver behavior analysis, usage-based insurance, in-vehicle marketplaces, fleet management and more. Safe and secure by design, the Sibros platform is certified to ISO 26262 ASIL-D, which combined with the S32G2 processors supporting ASIL-D systems, allows users to truly meet demanding functional safety requirements.

Jungo to implement driver and occupant monitoring system on Xilinx SoC

Jungo has announced an integrated next-generation CoDriver driver monitoring system (DMS) and occupant monitoring system (OMS) AI software using the Xilinx, Inc. 28nm Zynq-7000 SoC family, providing a comprehensive solution for the ADAS market.

This collaboration aims to provide a cost-effective, adaptable hardware and software solution. Jungo's CoDriver software provides a sensor agnostic solution that tracks both drivers and passengers, including real-time distraction and drowsiness alerts, occupancy detection, children-left-behind detection, and much more.

The Xilinx Zynq-7000 SoC contains a combination of programmable logic (PL), a deep learning processor unit (DPU), and CPU cores. By creating parallel processing pipelines within the PL, the Zynq-7000 SoC delivers the highest processing efficiency possible. With the DPU, a configurable computation engine within the PL, DMS and OMS deep learning models can become highly-optimized – offering up to 40x acceleration – thus providing OEMs a platform to efficiently process all requisite features for their DMS and OMS, all while balancing cost in a mature processing node.

SK Inc to promote Kodiak Robotics self-driving trucks in Asia

Kodiak Robotics, Inc. and SK Inc has announced a partnership to bring the Kodiak Driver, the company's self-driving technology, to the Asia-Pacific (APAC) markets. As part of the relationship, SK will work with Kodiak to seek new business opportunities that utilize Kodiak's self-driving technology. In addition, the companies will work together to provide fleet management services for customers in Asia.

Kodiak will look to leverage SK's products, components and technology for its autonomous system, including artificial intelligence microprocessors and advanced emergency braking systems.

The partnership marks a significant milestone for the company as it works towards international expansion. Asia represents a $1.5 trillion freight market, making this a key opportunity for Kodiak's international operations.

Radius acquires Modus to advance vehicle telematics

Radius is continuing its strategy of building a globally leading range of Telematics and Connected Vehicle products with the acquisition of Modus a leading Insuretech business based in Huntington Beach, California. Modus has been a pioneer in the wireless and vehicle telematics space and provides services to many of the world's leading insurers and technology companies.

Marelli partners with DHL Supply Chain to deliver logistics solutions

Marelli has signed a five-year service agreement with DHL to transform its supply chain operations in North America. The partnership will drive efficiency, cost savings and sustainable best practices throughout the region, and will promote integration across business units through the implementation of common practices and innovative digital tools.

As part of its ongoing transformation outlined in AMBITION 2024, Marelli is focused on developing core competencies to improve customer value and drive profitability. The DHL partnership will not only provide Marelli with access to best practices, skilled experts and the latest technology, it will free up valuable resources enabling greater focus on fundamental business development.

Omega Seiki launches rapid charging electric 3-wheelers

Omega Seiki Pvt Ltd announced a strategic partnership with Log 9 Materials introducing rapid charging batteries for its Rage+ electric three-wheelers. The batteries will be first introduced in two variants – a 5.8 kWh, 120 Ah unit and a 6.5 kWh, 140 Ah battery which will take 30 minutes and 35 minutes, respectively to charge fully. The battery packs will have a 15-year warranty.

Both variants can operate in temperatures between -40°C and +65°C, making them perfect for Indian conditions. Developed by Log 9 Materials, these batteries will have 15,000 charge cycles, offering a range of about 65 to 100 km when fully charged.

Hero Electric and MoEVing join hands to accelerate EV adoption

Electric fleet startup MoEVing has partnered with Hero Electric to accelerate the adoption of the affordable electric vehicle, with plans to convert one-lakh internal combustion engine-run two-wheelers to EVs in the next five years. The two partners aim to work together to increase adoption of EVs via new demand and also focus on existing ICE vehicles to convert to EVs. In the next five years, the partnership aims to convert 1,00,000 two-wheeler ICE vehicles — used in last-mile delivery — to EVs.

Under the collaboration, MoEVing platform will provide access to data and analytics modules and Hero Electric will help with vehicle and battery performance and other maintenance issues on a real-time basis to further accelerate technology, product, and service improvements.

JBM Eco-Life electric AC bus launched in Ahmedabad

JBM has launched its Eco-Life electric AC bus in Ahmedabad. These buses will be under the BRTS scheme by Ahmedabad Janmarg Ltd. The latter is a 100 percent subsidiary of the Ahmedabad Municipal Corporation. The bus is a zero emissions model that the company claims will save almost 1,000 tons equivalent CO2 and 3.5 lakh litres of diesel, in the 10 years of its operation. Further, the company claims that on a single charge, the bus can cover 250km whereas fast charging is also supported. The battery compartment is made up of Li-ion battery cells. JBM Auto says that it has put up a e-mobility ecosystem at the Vastral depot where these buses will be parked. This solution includes the buses, their charging infrastructure, power infrastructure and maintenance.

Apart from this, the company has installed a fast-charging station that will ensure minimum downtime of the vehicles. Further, all these buses come with features such as Automatic Bus Vehicle Location System, Real-Time Passenger Information System (PIS), CCTV cameras, Panic Buttons for emergency, public address system, Stop request buttons to name a few. JBM ECO-LIFE bus incorporates other utility features such as Vehicle Health Monitoring System, Fire Detection & Suppression System, public address system etc. For drivers, the aesthetically designed dashboard claims to give a user-friendly system that gives the drivers a distraction-free experience.

Zomato's entire fleet to be electric vehicle by 2030

Zomato said it will join EV100, a global initiative of companies committed to switching their fleets to electric vehicles by 2030. In a blog post, Deepinder Goyal, co-founder and CEO of the company, said Zomato is already delivering via EVs in cities such as Delhi, Bangalore, and Mumbai and is committed to a full transition by 2030.

The IPO-bound company said that they have multiple partners to source EVs . In April, Zomato announced that it will fund local environmental projects to offset the carbon footprint of its deliveries and packaging in India. Currently, it fulfils 20% of its total orders on bicycles, which it says have no carbon footprint and are pollution-free. In New Delhi, it does 35% of orders on bicycles.

Tech Mahindra joins STAR, Standards for Technology in Automotive Retail

The STAR organization (Standards for Technology in Automotive Retail) announced that Tech Mahindra, a leading provider of consulting and business re-engineering services and solutions, has joined STAR.

STAR Chairman Rafael Maldonado (Vice President and CIO of the National Automobile Dealers Association) commented, "We are extremely excited to have Tech Mahindra as a member of STAR and we look forward to Tech Mahindra's collaboration with STAR's members as we move forward with our objective of providing a broad framework and related standards for the secure interchange, integration, sharing, and retrieval of auto retail information. STAR membership continues to grow and we are taking positive steps to support the collaboration necessary to realize our mission of delivering industry standards that allow for secure, global data interoperability using modern standards and technologies."

TVS signs MoU with CESL for EV charging station network

TVS Motor Company has announced a partnership with CESL (Convergence Energy Services Ltd) under which CESL and TVS will jointly develop the public charging ecosystem for the TVS iQube Electric scooter across India. The two companies inked the deal on World Environment Day this year. The company's MoU with CESL, a 100% owned subsidiary of EESL, comes after TVS announced that it would make the iQueb available in over 20 cities by the end of FY 2021-22.

As part of the partnership, CESL will help strengthen the charging infrastructure in these cities for the customers of the electric scooter.

Gujarat's Statue of Unity to be EV only zone

Gujarat's Statue of Unity area is set to become India's first electric vehicles-only zone. PM Narendra Modi announced the move, the Statue of Unity Area Development and Tourism Governance Authority (SOUADTGA) has said it will develop the area, situated in Gujarat's Kevadia, into a zone free from vehicular pollution.

According to the plan, local residents living around the statue of Sardar Vallabhbhai Patel will get assistance to buy electric three-wheelers. The SOUADTGA said it will also provide subsidy for buying electric vehicles.

According to the agency, at least 50 e-rickshaws will be allowed to ply in the area under the authority initially. Women will get preference as the drivers of these e-rickshaws. The agency has also asked the company operating the e-rickshaw in the area to develop a smart mobile app which will mention the fares for these e-vehicles besides other information on tourist attractions. Eco-friendly eBikes were also launched there.

Fleet management system for the

Trucking Industry

Success Stories

- Simplifying IFTA
- Airport consignment managment
- Logistics management
- Delivery vehicle management

info@uffizio.in
www.uffizio.com

uffizio
We are the Software people

JOIN US AT

APAC'S BIGGEST CONNECTED & AUTONOMOUS VEHICLE CONFERENCE & EXHIBITION

SECURE™ THINGS

PRESENTS

CONNECTED & AUTONOMOUS VEHICLE

VIRTUAL CONFERENCE & EXHIBITION

15 SEPTEMBER 2021

ANALYTICS

1100+ PARTICIPANTS

80+ EXHIBITIONS

10+ VEHICLE DISPLAY

20+ COUNTRIES

60+ SPEAKERS

10+ SESSIONS & EXPERT PANEL

20+ Countries

(India, USA, Canada, South Korea, Japan, Australia, UK, Spain, France, Singapore, Russia, Israel, Germany, Brazil, Israel, Italy, Switzerland, Thailand, United Arab Emirates, Sweden, Mexico, Sri Lanka, South Africa, Netherlands, Nepal)

FOR MORE DETAILS, PLEASE CONTACT

Anuj Sinha | +91-87440 88838 | anuj.sinha@telematicswire.net